SC826 Series Chassis

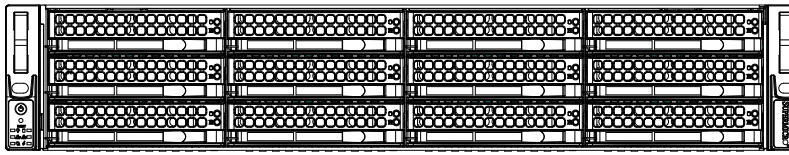

SC826BE1C-R920LPB
SC826BE1C-R920WB
SC826BE2C-R920LPB
SC826BE2C-R920WB
SC826BA-R1K28LPB
SC826BA-R1K28WB
SC826BE26-R1K28LPB
SC826BE26-R1K28WB
SC826BE16-R1K28LPB
SC826BE16-R1K28WB
SC826E26-R1200LPB
SC826E26-R1200UB
SC826E16-R1200LPB
SC826E16-R1200UB
SC826A-R1200LPB
SC826A-R1200UB
SC826BA-R920LPB
SC826BA-R920UB
SC826BA-R920WB
SC826BE26-R920LPB
SC826BE26-R920UB
SC826BE26-R920WB
SC826BE16-R920LPB
SC826BE16-R920UB
SC826BE16-R920WB
SC826TQ-R800LPV(B)
SC826TQ-R800UB
SC826TQ-R500LPB
SC826E16-R500LPB

USER'S MANUAL

Revision 2.0a

The information in this User's Manual has been carefully reviewed and is believed to be accurate. The vendor assumes no responsibility for any inaccuracies that may be contained in this document, makes no commitment to update or to keep current the information in this manual, or to notify any person or organization of the updates. **Please Note: For the most up-to-date version of this manual, please see our web site at www.supermicro.com**.

Super Micro Computer, Inc. ("Supermicro") reserves the right to make changes to the product described in this manual at any time and without notice. This product, including software and documentation, is the property of Supermicro and/or its licensors, and is supplied only under a license. Any use or reproduction of this product is not allowed, except as expressly permitted by the terms of said license.

IN NO EVENT WILL SUPERMICRO BE LIABLE FOR DIRECT, INDIRECT, SPECIAL, INCIDENTAL, SPECULATIVE OR CONSEQUENTIAL DAMAGES ARISING FROM THE USE OR INABILITY TO USE THIS PRODUCT OR DOCUMENTATION, EVEN IF ADVISED OF THE POSSIBILITY OF SUCH DAMAGES. IN PARTICULAR, SUPERMICRO SHALL NOT HAVE LIABILITY FOR ANY HARDWARE, SOFTWARE, OR DATA STORED OR USED WITH THE PRODUCT, INCLUDING THE COSTS OF REPAIRING, REPLACING, INTEGRATING, INSTALLING OR RECOVERING SUCH HARDWARE, SOFTWARE, OR DATA.

Any disputes arising between manufacturer and customer shall be governed by the laws of Santa Clara County in the State of California, USA. The State of California, County of Santa Clara shall be the exclusive venue for the resolution of any such disputes. Super Micro's total liability for all claims will not exceed the price paid for the hardware product.

California Best Management Practices Regulations for Perchlorate Materials: This Perchlorate warning applies only to products containing CR (Manganese Dioxide) Lithium coin cells. "Perchlorate Material-special handling may apply. See www.dtsc.ca.gov/hazardouswaste/perchlorate"

WARNING: Handling of lead solder materials used in this product may expose you to lead, a chemical known to the State of California to cause birth defects and other reproductive harm.

Manual Revision 2.0a
Release Date: October 30, 2015

Unless you request and receive written permission from Super Micro Computer, Inc., you may not copy any part of this document.

Information in this document is subject to change without notice. Other products and companies referred to herein are trademarks or registered trademarks of their respective companies or mark holders.

Copyright © 2015 by Super Micro Computer, Inc.
All rights reserved.
Printed in the United States of America

Preface

About This Manual

This manual is written for professional system integrators and PC technicians. It provides information for the installation and use of the chassis. Installation and maintenance should be performed by experienced technicians only.

This document lists compatible parts available when this document was published. Refer to the Supermicor web site for updates on supported parts and configurations.

Contents

Chapter 1 Introduction

1-1 Overview 1-1
1-2 Models 1-1
1-3 Features 1-3
Drives 1-3
System Power 1-3
Front Control Panel 1-3
Cooling System 1-3
1-4 Contacting Supermicro 1-4
1-5 Returning Merchandise for Service 1-5

Chapter 2 Standardized Warning Statements for AC/DC Systems

Warning Definition 2-1
Installation Instructions 2-4
Circuit Breaker 2-5
Power Disconnection Warning 2-6
Equipment Installation 2-8
Restricted Area 2-9
Battery Handling 2-10
Redundant Power Supplies 2-12
Backplane Voltage 2-13
Comply with Local and National Electrical Codes 2-14
Product Disposal 2-15
Hot Swap Fan Warning 2-16
DC Power Supply 2-18
DC Power Disconnection 2-20
Hazardous Voltage or Energy Present on DC Power Terminals 2-21

Chapter3 System Interface

3-1 Overview 3-1
3-2 Control Panel Buttons 3-2
3-3 Control Panel LEDs 3-2
Overheating 3-3
Overheat Temperature Setting 3-3
Responses 3-4
3-4 Drive Carrier LEDs 3-4
3-5 Power Supply LEDs 3-4

Chapter 4 Chassis Setup and Maintenance

4-1 Removing Power from the System 4-1
4-2 Removing the Chassis Cover 4-2
4-3 Installing Hard Drives 4-3
Removing a 3.5" Hard Drive Carrier 4-3
Installing 3.5" Hard Drives 4-4
Installing the Rear 2.5" Hard Drive Cage (SC826B Only) 4-6
Installing the Rear Drives Into Carriers (SC826B Only) 4-8
4-4 Installing the Motherboard 4-9
Riser Card Bracket (W or U Models only) 4-9
I/O Shield 4-9
Permanent and Optional Standoffs 4-10
Installing the Motherboard 4-11
4-5 Installing Expansion Cards 4-12
Expansion Cards for an LP Model Chassis 4-12
Expansion Cards for a W or U Model Chassis 4-12
4-6 Installing the Air Shroud 4-15
Checking the Airflow 4-16
4-7 System Maintenance 4-17
System Fans 4-17
Power Supply 4-19
Power Distributor 4-20
Optional Front Bezel 4-21

Chapter 5 Rack Installation

5-1 Unpacking the System 5-1
5-2 Preparing for Setup 5-1
Choosing a Setup Location 5-1
5-3 Warnings and Precautions 5-2
Rack Precautions 5-2
General Server Precautions 5-2
Rack Mounting Considerations 5-3
Ambient Operating Temperature 5-3
Sufficient Airflow 5-3
Circuit Overloading 5-3
Reliable Ground 5-3
5-4 Installing the System into a Rack 5-4
Identifying the Sections of the Rack Rails 5-4
Releasing the Inner Rail 5-5

Installing the Inner Rails on the Chassis 5-6
Installing the Outer Rails onto the Rack 5-7
Sliding the Chassis onto the Rack Rails 5-8

Appendix A SC826 Chassis Cables

Appendix B SC826 Power Supply Specifications

Appendix C BPN-SAS-826TQ Backplane Specifications

Appendix D BPN-SAS-826A Backplane Specifications

Appendix E BPN-SAS2-826EL Backplane Specifications

Appendix F BPN-SAS3-826EL Backplane Specifications

Chapter 1

Introduction

1-1 Overview

Supermicro's SC826 chassis maximizes the storage capacity of a 2U form factor by offering twelve hot-swappable hard drive bays. It is ideal for data storage applications. The chassis design optimizes every aspect of interior space, without compromising superior cooling and is equipped with a redundant power supply.

1-2 Models

Visit the Supermicro web site for the latest models and parts lists at www.supermicro.com. A complete list of safety warnings is provided on the Supermicro web site at www.supermicro.com/about/policies/safety_information.cfm.

Model	HDD	I/O Slots	Power Supply
SC826BE1C-R920LPB	12xSAS3/SATA +2 opt. SAS3 12Gb/s 1x expander	7x LP	920W Redundant (Platinum Level)
SC826BE1C-R920WB	2xSAS3/SATA +2 opt SAS3 12Gb/s 1x expander	4x FH, 3x LP	920W Redundant (Platinum Level)
SC826BE2C-R920LPB	2xSAS3/SATA +2 opt SAS3 12Gb/s 2x expander	7x LP	920W Redundant (Platinum Level)
SC826BE2C-R920WB	2xSAS3/SATA +2 opt SAS3 12Gb/s 2x expander	4x FH, 3x LP	920W Redundant (Platinum Level)
SC826BA-R1K28LPB	12x SAS/SATA + 2 opt.	7x LP	1280W Redundant (Platinum Level)
SC826BA-R1K28WB	12x SAS/SATA + 2 opt.	4x FH, 3x LP	1280W Redundant (Platinum Level)
SC826BE26-R1K28LPB	12x SAS/SATA + 2 opt.dual expander SAS2 backplane	7x LP	1280W Redundant (Platinum Level)
SC826BE26-R1K28WB	12x SAS/SATA + 2 opt.dual expander SAS2 backplane	4x FH, 3x LP	1280W Redundant (Platinum Level)
SC826BE16-R1K28LPB	12x SAS/SATA + 2 opt.single expander SAS2 backplane	7x LP	1280W Redundant (Platinum Level)
SC826BE16-R1K28WB	12x SAS/SATA + 2 opt.single expander SAS2 backplane	4x FH, 3x LP	1280W Redundant (Platinum Level)
SC826E16-R1200LPB	12x SAS/SATA	7x LP	1200W Redundant (Gold Level)
SC826E16-R1200UB	12x SAS/SATA	4x FF (1x UIO), 3x LP	1200W Redundant (Gold Level)
SC826E26-R1200LPB	12x SAS/SATA	7x LP	1200W Redundant (Gold Level)

SC826E26-R1200UB	12x SAS/SATA	4x FF (1x UIO), 3x LP	1200W Redundant (Gold Level)
SC826A-R1200LPB	12x SAS/SATA	7x LP	1200W Redundant (Gold Level)
SC826A-R1200UB	12x SAS/SATA	4x FF (1x UIO), 3x LP	1200W Redundant (Gold Level)
S826BA-920LPB	12x SAS/SATA +2 opt.	7x LP	920W Redundant (Platinum Level)
SC826BA-R920UB	12x SAS/SATA +2 opt.	4x FH, 2x LP	920W Redundant (Platinum Level)
SC826BA-R920WB	12x SAS/SATA +2 opt.	4x FH, 3x LP	920W Redundant (Platinum Level)
SC826BE26-R920LPB	12x SAS/SATA +2 opt., dual expander SAS2 backplane	7x LP	920W Redundant (Platinum Level)
SC826BE26-R920UB	12x SAS/SATA +2 opt., dual expander SAS2 backplane	4x FH, 2x LP	920W Redundant (Platinum Level)
SC826BE26-R920WB	12x SAS/SATA +2 opt., dual expander SAS2 backplane	4X FH, 3x LP	920W Redundant (Platinum Level)
SC826BE16-R920LPB	12x SAS/SATA +2 opt., single expander SAS2 backplane	7x LP	920W Redundant (Platinum Level)
SC826BE16-R920UB	12x SAS/SATA +2 opt., single expander SAS2 backplane	4X FH, 2x LP	920W Redundant (Platinum Level)
SC826BE16-R920WB	12x SAS/SATA +2 opt., single expander SAS2 backplane	4x FH, 3x LP	920W Redundant (Platinum Level)
SC826TQ-R800LP(V)(B)	12x SAS/SATA	7x LP	800W Redundant
SC826TQ-R800UB	12x SAS/SATA	4x FF (1x UIO), 3x LP	800W Redundant
SC826TQ-R500LPB	12x SAS/SATA	7x LP	500W Redundant (Platinum Level)
SC826E16-R500LPB	12x SAS/SATA	7x LP	500W Redundant (Platinum Level)

Legend:
LP: Low profile
FF: Full-height, full-length
FH: Full-height, half-length

1-3 Features

Drives

The chassis allows twelve 3.5" hot-swap SAS3/SATA hard disk drives. Some models support two optional 2.5" hot-swap drives for OS mirroring.

System Power

Different models offer redundant power supply modules of several different wattages.

Front Control Panel

The control panel provides a monitoring and control interface. LEDs indicate system status and buttons control system power.

Cooling System

The system includes three 80mm hot-swap fans

1-4 Contacting Supermicro

Headquarters

Address:	Super Micro Computer, Inc. 980 Rock Ave. San Jose, CA 95131 U.S.A.
Tel:	+1 (408) 503-8000
Fax:	+1 (408) 503-8008
Email:	marketing@supermicro.com (General Information) support@supermicro.com (Technical Support)
Web Site:	www.supermicro.com

Europe

Address:	Super Micro Computer B.V. Het Sterrenbeeld 28, 5215 ML 's-Hertogenbosch, The Netherlands
Tel:	+31 (0) 73-6400390
Fax:	+31 (0) 73-6416525
Email:	sales@supermicro.nl (General Information) support@supermicro.nl (Technical Support) rma@supermicro.nl (Customer Support)
Web Site:	www.supermicro.nl

Asia-Pacific

Address:	Super Micro Computer, Inc. 3F, No. 150, Jian 1st Rd. Zhonghe Dist., New Taipei City 235 Taiwan (R.O.C)
Tel:	+886-(2) 8226-3990
Fax:	+886-(2) 8226-3992
Email:	support@supermicro.com.tw
Web Site:	www.supermicro.com.tw

1-5 Returning Merchandise for Service

A receipt or copy of your invoice marked with the date of purchase is required before any warranty service will be rendered. You can obtain service by calling your vendor for a Returned Merchandise Authorization (RMA) number. When returning to the manufacturer, the RMA number should be prominently displayed on the outside of the shipping carton, and mailed prepaid or hand-carried. Shipping and handling charges will be applied for all orders that must be mailed when service is complete.

For faster service, RMA authorizations may be requested online (http://www.supermicro.com/support/rma/).

Whenever possible, repack the chassis in the original Supermicro carton, using the original packaging material. If these are no longer available, be sure to pack the chassis securely, using packaging material to surround the chassis so that it does not shift within the carton and become damaged during shipping.

This warranty only covers normal consumer use and does not cover damages incurred in shipping or from failure due to the alteration, misuse, abuse or improper maintenance of products.

During the warranty period, contact your distributor first for any product problems.

Notes

Chapter 2

Standardized Warning Statements for AC/DC Systems

2-1 About Standardized Warning Statements

The following statements are industry standard warnings, provided to warn the user of situations which have the potential for bodily injury. Should you have questions or experience difficulty, contact Supermicro's Technical Support department for assistance. Only certified technicians should attempt to install or configure components.

Read this appendix in its entirety before installing or configuring components in the Supermicro chassis.

These warnings may also be found on our web site at http://www.supermicro.com/about/policies/safety_information.cfm.

Warning Definition



Warning!

This warning symbol means danger. You are in a situation that could cause bodily injury. Before you work on any equipment, be aware of the hazards involved with electrical circuitry and be familiar with standard practices for preventing accidents.

警告の定義

この警告サインは危険を意味します。

人身事故につながる可能性がありますので、いずれの機器でも動作させる前に、

電気回路に含まれる危険性に注意して、標準的な事故防止策に精通して下さい。

此警告符号代表危险。

您正处于可能受到严重伤害的工作环境中。在您使用设备开始工作之前，必须充分意识到触电的危险，并熟练掌握防止事故发生的标准工作程序。请根据每项警告结尾的声明号码找到此设备的安全性警告说明的翻译文本。

此警告符號代表危險。

您正處於可能身體可能會受損傷的工作環境中。在您使用任何設備之前，請注意觸電的危險，並且要熟悉預防事故發生的標準工作程序。請依照每一注意事項後的號碼找到相關的翻譯說明內容。

Warnung

WICHTIGE SICHERHEITSHINWEISE

Dieses Warnsymbol bedeutet Gefahr. Sie befinden sich in einer Situation, die zu Verletzungen führen kann. Machen Sie sich vor der Arbeit mit Geräten mit den Gefahren elektrischer Schaltungen und den üblichen Verfahren zur Vorbeugung vor Unfällen vertraut. Suchen Sie mit der am Ende jeder Warnung angegebenen Anweisungsnummer nach der jeweiligen Übersetzung in den übersetzten Sicherheitshinweisen, die zusammen mit diesem Gerät ausgeliefert wurden.

BEWAHREN SIE DIESE HINWEISE GUT AUF.

INSTRUCCIONES IMPORTANTES DE SEGURIDAD

Este símbolo de aviso indica peligro. Existe riesgo para su integridad física. Antes de manipular cualquier equipo, considere los riesgos de la corriente eléctrica y familiarícese con los procedimientos estándar de prevención de accidentes. Al final de cada advertencia encontrará el número que le ayudará a encontrar el texto traducido en el apartado de traducciones que acompaña a este dispositivo.

GUARDE ESTAS INSTRUCCIONES.

IMPORTANTES INFORMATIONS DE SÉCURITÉ

Ce symbole d'avertissement indique un danger. Vous vous trouvez dans une situation pouvant entraîner des blessures ou des dommages corporels. Avant de travailler sur un équipement, soyez conscient des dangers liés aux circuits électriques et familiarisez-vous avec les procédures couramment utilisées pour éviter les accidents. Pour prendre connaissance des traductions des avertissements figurant dans les consignes de sécurité traduites qui accompagnent cet appareil, référez-vous au numéro de l'instruction situé à la fin de chaque avertissement.

CONSERVEZ CES INFORMATIONS.

תקנון הצהרות אזהרה

הצהרות הבאות הן אזהרות על פי תקני התעשייה, על מנת להזהיר את המשתמש מפני חבלה פיזית אפשרית. במידה ויש שאלות או היתקלות בבעיה כלשהי, יש ליצור קשר עם מחלקת תמיכה טכנית של סופרמיקרו. טכנאים מוסמכים בלבד רשאים להתקין או להגדיר את הרכיבים.

יש לקרוא את הנספח במלואו לפני התקנת או הגדרת הרכיבים במארזי סופרמיקרו.

تحذير! هذا الرمز يعني خطر انك في حالة يمكن أن تتسبب في اصابة جسدية .
قبل أن تعمل على أي معدات،كن على علم بالمخاطر الناجمة عن الدوائر
الكهربائية
وكن على دراية بالممارسات الوقائية لمنع وقوع أي حوادث
استخدم رقم البيان المنصوص في نهاية كل تحذير للعثور ترجمتها

안전을 위한 주의사항

경고!

이 경고 기호는 위험이 있음을 알려 줍니다. 작업자의 신체에 부상을 야기 할 수 있는 상태에 있게 됩니다. 모든 장비에 대한 작업을 수행하기 전에 전기회로와 관련된 위험요소들을 확인하시고 사전에 사고를 방지할 수 있도록 표준 작업절차를 준수해 주시기 바랍니다.

해당 번역문을 찾기 위해 각 경고의 마지막 부분에 제공된 경고문 번호를 참조하십시오

BELANGRIJKE VEILIGHEIDSINSTRUCTIES

Dit waarschuwings symbool betekent gevaar. U verkeert in een situatie die lichamelijk letsel kan veroorzaken. Voordat u aan enige apparatuur gaat werken, dient u zich bewust te zijn van de bij een elektrische installatie betrokken risico's en dient u op de hoogte te zijn van de standaard procedures om ongelukken te voorkomen. Gebruik de nummers aan het eind van elke waarschuwing om deze te herleiden naar de desbetreffende locatie.

BEWAAR DEZE INSTRUCTIES

Installation Instructions



Warning!

Read the installation instructions before connecting the system to the power source.

設置手順書

システムを電源に接続する前に、設置手順書をお読み下さい。

警告
将此系统连接电源前,请先阅读安装说明。

警告
將系統與電源連接前，請先閱讀安裝說明。

Warnung

Vor dem Anschließen des Systems an die Stromquelle die Installationsanweisungen lesen.

¡Advertencia!

Lea las instrucciones de instalación antes de conectar el sistema a la red de alimentación.

Attention

Avant de brancher le système sur la source d'alimentation, consulter les directives d'installation.

יש לקרוא את הוראות התקנה לפני חיבור המערכת למקור מתח.

اقر إرشادات التركيب قبل توصيل النظام إلى مصدر للطاقة

주의!

시스템을 전원에 연결하기 전에 설치 안내를 읽어주십시오.

Waarschuwing

Raadpleeg de installatie-instructies voordat u het systeem op de voedingsbron aansluit.

Circuit Breaker



Warning!

This product relies on the building's installation for short-circuit (overcurrent) protection. Ensure that the protective device is rated not greater than: 60VDC, 20 A.

サーキット・ブレーカー

この製品は、短絡（過電流）保護装置がある建物での設置を前提としています。

保護装置の定格が60VDC、20Aを超えないことを確認下さい。

警告

此产品的短路(过载电流)保护由建筑物的供电系统提供,确保短路保护设备的额定电流不大于600VDC,20A。

警告

此產品的短路(過載電流)保護由建築物的供電系統提供,確保短路保護設備的額定電流不大於60VDC,20A。

Warnung

Dieses Produkt ist darauf angewiesen, dass im Gebäude ein Kurzschluss- bzw. Überstromschutz installiert ist. Stellen Sie sicher, dass der Nennwert der Schutzvorrichtung nicht mehr als: 60VDC, 20A beträgt.

¡Advertencia!

Este equipo utiliza el sistema de protección contra cortocircuitos (o sobrecorrientes) del edificio. Asegúrese de que el dispositivo de protección no sea superior a: 60VDC, 20A.

Attention

Pour ce qui est de la protection contre les courts-circuits (surtension), ce produit dépend de l'installation électrique du local. Vérifiez que le courant nominal du dispositif de protection n'est pas supérieur à :60VDC, 20A.

מוצר זה מסתמך על הגנה המותקנת במבנים למניעת קצר חשמלי. יש לוודא כי
המכשיר המגן מפני הקצר החשמלי הוא לא יותר מ-20 A, 250 V

هذا المنتج يعتمد على معدات الحماية من الدوائرالقصيرة التي تم تثبيتها في
المبنى

경고!

이 제품은 전원의 단락(과전류)방지에 대해서 전적으로 건물의 관련 설비에 의존합니다. 보호장치의 정격이 반드시 60V(볼트), 20A(암페어)를 초과하지 않도록 해야 합니다.

Waarschuwing

Dit product is afhankelijk van de kortsluitbeveiliging (overspanning) van uw electrische installatie. Controleer of het beveiligde aparaat niet groter gedimensioneerd is dan 60V, 20A.

Power Disconnection Warning



Warning!

The system must be disconnected from all sources of power and the power cord removed from the power supply module(s) before accessing the chassis interior to install or remove system components.

電源切断の警告

システムコンポーネントの取り付けまたは取り外しのために、シャーシー内部にアクセスするには、
システムの電源はすべてのソースから切断され、電源コードは電源モジュールから取り外す必要があります。

警告

在你打开机箱并安装或移除内部器件前,必须将系统完全断电,并移除电源线。

警告

在您打開機殼安裝或移除內部元件前，必須將系統完全斷電，並移除電源線。

Warnung

Das System muss von allen Quellen der Energie und vom Netzanschlusskabel getrennt sein, das von den Spg.Versorgungsteilmodulen entfernt wird, bevor es auf den Chassisinnenraum zurückgreift, um Systemsbestandteile anzubringen oder zu entfernen.

¡Advertencia!

El sistema debe ser disconnected de todas las fuentes de energía y del cable eléctrico quitado de los módulos de fuente de alimentación antes de tener acceso el interior del chasis para instalar o para quitar componentes de sistema.

Attention

Le système doit être débranché de toutes les sources de puissance ainsi que de son cordon d'alimentation secteur avant d'accéder à l'intérieur du chassis pour installer ou enlever des composants de systéme.

אזהרה !

יש לנתק את המערכת מכל מקורות החשמל ויש להסיר את כבל החשמלי מהספק לפני גישה לחלק הפנימי של המארז לצורך התקנת או הסרת רכיבים.

يجب فصل النظام من جميع مصادر الطاقة وإزالة سلك الكهرباء من وحدة امداد الطاقة قبل
الوصول إلى المناطق الداخلية للهيكل لتثبيت أو إزالة مكونات الجهاز

경고!

시스템에 부품들을 장착하거나 제거하기 위해서는 섀시 내부에 접근하기 전에 반드시 전원 공급장치로부터 연결되어있는 모든 전원과 전기코드를 분리해주어야 합니다.

Waarschuwing

Voordat u toegang neemt tot het binnenwerk van de behuizing voor het installeren of verwijderen van systeem onderdelen, dient u alle spanningsbronnen en alle stroomkabels aangesloten op de voeding(en) van de behuizing te verwijderen

Equipment Installation



Warning!

Only trained and qualified personnel should be allowed to install, replace, or service this equipment.

機器の設置

トレーニングを受け認定された人だけがこの装置の設置、交換、またはサービスを許可されています。

警告

只有经过培训且具有资格的人员才能进行此设备的安装、更换和维修。

警告

只有經過受訓且具資格人員才可安裝、更換與維修此設備。

Warnung

Das Installieren, Ersetzen oder Bedienen dieser Ausrüstung sollte nur geschultem, qualifiziertem Personal gestattet werden.

¡Advertencia!

Solamente el personal calificado debe instalar, reemplazar o utilizar este equipo.

Attention

Il est vivement recommandé de confier l'installation, le remplacement et la maintenance de ces équipements à des personnels qualifiés et expérimentés.

אזהרה !

צוות מוסמך בלבד רשאי להתקין, להחליף את הציוד או לתת שירות עבור הציוד.

يجب أن يسمح فقط للموظفين المؤهلين والمدربين لتركيب واستبدال أو خدمة هذا الجهاز

경고!

훈련을 받고 공인된 기술자만이 이 장비의 설치, 교체 또는 서비스를 수행할 수 있습니다.

Waarschuwing

Deze apparatuur mag alleen worden geïnstalleerd, vervangen of hersteld door geschoold en gekwalificeerd personeel.

Restricted Area



Warning!

This unit is intended for installation in restricted access areas. A restricted access area can be accessed only through the use of a special tool, lock and key, or other means of security. (This warning does not apply to workstations).

アクセス制限区域

このユニットは、アクセス制限区域に設置されることを想定しています。

アクセス制限区域は、特別なツール、鍵と錠前、その他のセキュリティの手段を用いてのみ出入りが可能です。

警告

此部件应安装在限制进出的场所，限制进出的场所指只能通过使用特殊工具、锁和钥匙或其它安全手段进出的场所。

警告

此裝置僅限安裝於進出管制區域，進出管制區域係指僅能以特殊工具、鎖頭及鑰匙或其他安全方式才能進入的區域。

Warnung

Diese Einheit ist zur Installation in Bereichen mit beschränktem Zutritt vorgesehen. Der Zutritt zu derartigen Bereichen ist nur mit einem Spezialwerkzeug, Schloss und Schlüssel oder einer sonstigen Sicherheitsvorkehrung möglich.

¡Advertencia!

Esta unidad ha sido diseñada para instalación en áreas de acceso restringido. Sólo puede obtenerse acceso a una de estas áreas mediante la utilización de una herramienta especial, cerradura con llave u otro medio de seguridad.

Attention

Cet appareil doit être installée dans des zones d'accès réservés. L'accès à une zone d'accès réservé n'est possible qu'en utilisant un outil spécial, un mécanisme de verrouillage et une clé, ou tout autre moyen de sécurité.

אזור עם גישה מוגבלת

אזהרה !
יש להתקין את היחידה באזורים שיש בהם הגבלת גישה. הגישה ניתנת בעזרת כלי אבטחה בלבד (מפתח, מנעול וכד׳).

تم تخصيص هذه الوحدة لتركيبها في مناطق محظورة .
يمكن الوصول إلى منطقة محظورة فقط من خلال استخدام أداة خاصة،
قفل ومفتاح أو أي وسيلة أخرى للالأمان

경고!

이 장치는 접근이 제한된 구역에 설치하도록 되어있습니다. 특수도구, 잠금 장치 및 키, 또는 기타 보안 수단을 통해서만 접근 제한 구역에 들어갈 수 있습니다.

Waarschuwing

Dit apparaat is bedoeld voor installatie in gebieden met een beperkte toegang. Toegang tot dergelijke gebieden kunnen alleen verkregen worden door gebruik te maken van speciaal gereedschap, slot en sleutel of andere veiligheidsmaatregelen.

Battery Handling



Warning!

There is the danger of explosion if the battery is replaced incorrectly. Replace the battery only with the same or equivalent type recommended by the manufacturer. Dispose of used batteries according to the manufacturer's instructions

電池の取り扱い

電池交換が正しく行われなかった場合、破裂の危険性があります。交換する電池はメーカーが推奨する型、または同等のものを使用下さい。使用済電池は製造元の指示に従って処分して下さい。

警告
电池更换不当会有爆炸危险。请只使用同类电池或制造商推荐的功能相当的电池更换原有电池。请按制造商的说明处理废旧电池。

警告
電池更換不當會有爆炸危險。請使用製造商建議之相同或功能相當的電池更換原有電池。請按照製造商的說明指示處理廢棄舊電池。

Warnung

Bei Einsetzen einer falschen Batterie besteht Explosionsgefahr. Ersetzen Sie die Batterie nur durch den gleichen oder vom Hersteller empfohlenen Batterietyp. Entsorgen Sie die benutzten Batterien nach den Anweisungen des Herstellers.

Attention

Danger d'explosion si la pile n'est pas remplacée correctement. Ne la remplacer que par une pile de type semblable ou équivalent, recommandée par le fabricant. Jeter les piles usagées conformément aux instructions du fabricant.

¡Advertencia!

Existe peligro de explosión si la batería se reemplaza de manera incorrecta. Reemplazar la batería exclusivamente con el mismo tipo o el equivalente recomendado por el fabricante. Desechar las baterías gastadas según las instrucciones del fabricante.

אזהרה !
קיימת סכנת פיצוץ של הסוללה במידה והוחלפה בדרך לא תקינה. יש להחליף את הסוללה בסוג התואם מחברת יצרן מומלצת.

סילוק הסוללות המשומשות יש לבצע לפי הוראות היצרן.

هناك خطر من انفجار في حالة استبدال البطارية بطريقة غير صحيحة فعليك استبدال البطارية
فقط بنفس النوع أو ما يعادلها كما أوصت به الشركة المصنعة
تخلص من البطاريات المستعملة وفقا لتعليمات الشركة الصانعة

경고!

배터리가 올바르게 교체되지 않으면 폭발의 위험이 있습니다. 기존 배터리와 동일하거나 제조사에서 권장하는 동등한 종류의 배터리로만 교체해야 합니다. 제조사의 안내에 따라 사용된 배터리를 처리하여 주십시오.

Waarschuwing

Er is ontploffingsgevaar indien de batterij verkeerd vervangen wordt. Vervang de batterij slechts met hetzelfde of een equivalent type die door de fabrikant aanbevolen wordt. Gebruikte batterijen dienen overeenkomstig fabrieksvoorschriften afgevoerd te worden.

Redundant Power Supplies



Warning!

This unit might have more than one power supply connection. All connections must be removed to de-energize the unit.

冗長電源装置
このユニットは複数の電源装置が接続されている場合があります。
ユニットの電源を切るためには、すべての接続を取り外さなければなりません。

警告
此部件连接的电源可能不止一个，必须将所有电源断开才能停止给该部件供电。

警告
此裝置連接的電源可能不只一個，必須切斷所有電源才能停止對該裝置的供電。

Warnung

Dieses Gerät kann mehr als eine Stromzufuhr haben. Um sicherzustellen, dass der Einheit kein trom zugeführt wird, müssen alle Verbindungen entfernt werden.

¡Advertencia!

Puede que esta unidad tenga más de una conexión para fuentes de alimentación. Para cortar por completo el suministro de energía, deben desconectarse todas las conexiones.

Attention

Cette unité peut avoir plus d'une connexion d'alimentation. Pour supprimer toute tension et tout courant électrique de l'unité, toutes les connexions d'alimentation doivent être débranchées.

אם קיים יותר מספק אחד

אזהרה !
ליחדה יש יותר מחיבור אחד של ספק. יש להסיר את כל החיבורים על מנת לרוקן את היחידה.

قد يكون لهذا الجهاز عدة اتصالات بوحدات امداد الطاقة.
يجب إزالة كافة الاتصالات لعزل الوحدة عن الكهرباء

경고!

이 장치에는 한 개 이상의 전원 공급 단자가 연결되어 있을 수 있습니다. 이 장치에 전원을 차단하기 위해서는 모든 연결 단자를 제거해야만 합니다.

Waarschuwing

Deze eenheid kan meer dan één stroomtoevoeraansluiting bevatten. Alle aansluitingen dienen verwijderd te worden om het apparaat stroomloos te maken.

Backplane Voltage



Warning!

Hazardous voltage or energy is present on the backplane when the system is operating. Use caution when servicing.

バックプレーンの電圧

システムの稼働中は危険な電圧または電力が、バックプレーン上にかかっています。

修理する際には注意ください。

警告

当系统正在进行时，背板上有很危险的电压或能量，进行维修时务必小心。

警告

當系統正在進行時，背板上有危險的電壓或能量，進行維修時務必小心。

Warnung

Wenn das System in Betrieb ist, treten auf der Rückwandplatine gefährliche Spannungen oder Energien auf. Vorsicht bei der Wartung.

¡Advertencia!

Cuando el sistema está en funcionamiento, el voltaje del plano trasero es peligroso. Tenga cuidado cuando lo revise.

Attention

Lorsque le système est en fonctionnement, des tensions électriques circulent sur le fond de panier. Prendre des précautions lors de la maintenance.

מתח בפנל האחורי

אזהרה !
קיימת סכנת מתח בפנל האחורי בזמן תפעול המערכת. יש להיזהר במהלך העבודה.

هناك خطر من التيار الكهربائي أوالطاقة الموجودة على اللوحة
عندما يكون النظام يعمل كن حذرا عند خدمة هذا الجهاز

경고!

시스템이 동작 중일 때 후면판 (Backplane)에는 위험한 전압이나 에너지가 발생합니다. 서비스 작업 시 주의하십시오.

Waarschuwing

Een gevaarlijke spanning of energie is aanwezig op de backplane wanneer het systeem in gebruik is. Voorzichtigheid is geboden tijdens het onderhoud.

Comply with Local and National Electrical Codes



Warning!

Installation of the equipment must comply with local and national electrical codes.

地方および国の電気規格に準拠
機器の取り付けはその地方および国の電気規格に準拠する必要があります。

警告

设备安装必须符合本地与本国电气法规。

警告

設備安裝必須符合本地與本國電氣法規。

Warnung

Die Installation der Geräte muss den Sicherheitsstandards entsprechen.

¡Advertencia!

La instalacion del equipo debe cumplir con las normas de electricidad locales y nacionales.

Attention

L'équipement doit être installé conformément aux normes électriques nationales et locales.

תיאום חוקי החשמל הארצי

אזהרה !
התקנת הציוד חייבת להיות תואמת לחוקי החשמל המקומיים והארציים.

تركيب المعدات الكهربائية يجب أن يمتثل للقوانين المحلية والوطنية المتعلقة بالكهرباء

경고!

현 지역 및 국가의 전기 규정에 따라 장비를 설치해야 합니다.

Waarschuwing

Bij installatie van de apparatuur moet worden voldaan aan de lokale en nationale elektriciteitsvoorschriften.

Product Disposal

Warning!

Ultimate disposal of this product should be handled according to all national laws and regulations.

製品の廃棄

この製品を廃棄処分する場合、国の関係する全ての法律・条例に従い処理する必要があります。

警告
本产品的废弃处理应根据所有国家的法律和规章进行。

警告
本產品的廢棄處理應根據所有國家的法律和規章進行。

Warnung

Die Entsorgung dieses Produkts sollte gemäß allen Bestimmungen und Gesetzen des Landes erfolgen.

¡Advertencia!

Al deshacerse por completo de este producto debe seguir todas las leyes y reglamentos nacionales.

Attention

La mise au rebut ou le recyclage de ce produit sont généralement soumis à des lois et/ou directives de respect de l'environnement. Renseignez-vous auprès de l'organisme compétent.

סילוק המוצר

אזהרה !
סילוק סופי של מוצר זה חייב להיות בהתאם להנחיות וחוקי המדינה.

عند التخلص النهائي من هذا المنتج ينبغي التعامل معه وفقا لجميع القوانين واللوائح الوطنية

경고!

이 제품은 해당 국가의 관련 법규 및 규정에 따라 폐기되어야 합니다.

Waarschuwing

De uiteindelijke verwijdering van dit product dient te geschieden in overeenstemming met alle nationale wetten en reglementen.

Hot Swap Fan Warning



Warning!

The fans might still be turning when you remove the fan assembly from the chassis. Keep fingers, screwdrivers, and other objects away from the openings in the fan assembly's housing.

ファン・ホットスワップの警告

シャーシから冷却ファン装置を取り外した際、ファンがまだ回転している可能性があります。ファンの開口部に、指、ドライバー、およびその他のものを近づけないで下さい。

警告
当您从机架移除风扇装置，风扇可能仍在转动。小心不要将手指、螺丝起子和其他物品太靠近风扇

警告
當您從機架移除風扇裝置，風扇可能仍在轉動。小心不要將手指、螺絲起子和其他物品太靠近風扇。

Warnung

Die Lüfter drehen sich u. U. noch, wenn die Lüfterbaugruppe aus dem Chassis genommen wird. Halten Sie Finger, Schraubendreher und andere Gegenstände von den Öffnungen des Lüftergehäuses entfernt.

¡Advertencia!

Los ventiladores podran dar vuelta cuando usted quite ell montaje del ventilador del chasis. Mandtenga los dedos, los destornilladores y todos los objetos lejos de las aberturas del ventilador

Attention

Il est possible que les ventilateurs soient toujours en rotation lorsque vous retirerez le bloc ventilateur du châssis. Prenez garde à ce que doigts, tournevis et autres objets soient éloignés du logement du bloc ventilateur.

אזהרה !
כאשר מסירים את חלקי המאוורר מהמארז, יתכן והמאוררים עדיין עובדים. יש להרחיק למרחק בטוח את האצבעות וכלי עבודה שונים מהפתחים בתוך המאוורר

من الممكن أن المراوح لا تزال تدور عند إزالة كتلة المروحة من الهيكل يجب إبقاء الأصابع ومفكات البراغي
وغيرها من الأشياء بعيدا عن الفتحات في كتلة المروحة.

경고!

섀시로부터 팬 조립품을 제거할 때 팬은 여전히 회전하고 있을 수 있습니다. 팬 조림품 외관의 열려있는 부분들로부터 손가락 및 스크류드라이버, 다른 물체들이 가까이 하지 않도록 배치해 주십시오.

Waarschuwing

Het is mogelijk dat de ventilator nog draait tijdens het verwijderen van het ventilatorsamenstel uit het chassis. Houd uw vingers, schroevendraaiers en eventuele andere voorwerpen uit de buurt van de openingen in de ventilatorbehuizing.

DC Power Supply



Warning!

When stranded wiring is required, use approved wiring terminations, such as closedloop or spade-type with upturned lugs. These terminations should be the appropriate size for the wires and should clamp both the insulation and conductor.

警告

より線が必要な場合、承認済みのケーブル終端（上向きの端子を備えたクローズループ型またはU字型の終端など）を使用してください。使用するワイヤーに適したサイズで、絶縁体および導体が両方ともクランプされている終端でなければなりません。

警告
需要多股佈線時，請使用經核准的佈線終端，例如閉環或鏟型接線片。 這些終端的大小應適合線路，並且可以同時夾住絕緣體和導體。

警告
需要使用绞线连接时，请使用经认可的连接端子，如闭环端子或具有接线柱的铲形端子。这些端子的大小应与线缆相吻合，并且可以将绝缘部分和导体夹紧固定。

Warnung

Wenn Litzenverdrahtung erforderlich ist, sind zugelassene Verdrahtungsabschlüsse, z.B. für einen geschlossenen Regelkreis oder gabelförmig, mit nach oben gerichteten Kabelschuhen zu verwenden. Diese Abschlüsse sollten die angemessene Größe für die Drähte haben und sowohl die Isolierung als auch den Leiter festklemmen.

¡Advertencia!

Cuando se necesite hilo trenzado, utilizar terminales para cables homologados, tales como las de tipo "bucle cerrado" o "espada", con las lengüetas de conexión vueltas hacia arriba. Estos terminales deberán ser del tamaño apropiado para los cables que se utilicen, y tendrán que sujetar tanto el aislante como el conductor.

Attention

Quand des fils torsadés sont nécessaires, utiliser des douilles terminales homologuées telles que celles à circuit fermé ou du type à plage ouverte avec cosses rebroussées. Ces douilles terminales doivent être de la taille qui convient aux fils et doivent être refermées sur la gaine isolante et sur le conducteur.

תקנון הצהרות אזהרה

הצהרות הבאות הן אזהרות על פי תקני התעשייה, על מנת להזהיר את המשתמש מפני חבלה פיזית אפשרית. במידה ויש שאלות או היתקלות בבעיה כלשהי, יש ליצור קשר עם מחלקת תמיכה טכנית של סופרמיקרו. טכנאים מוסמכים בלבד רשאים להתקין או להגדיר את הרכיבים.

יש לקרוא את הנספח במלואו לפני התקנת או הגדרת הרכיבים במארזי סופרמיקרו.

تحذير

عندما يكون مطلوبا الأسلاك الذين تقطعت بهم السبل، واستخدام الأسلاك إنهاء الموافقة عليها، مثل حلقة مغلقة أو الأشياء بأسمائها الحقيقية النوع مع العروات مقلوبة. وينبغي لهذه الإنهاءات يكون الحجم المناسب للأسلاك ويجب كبح كل من العزل وموصل.

주의!

꼬인 배선이 요구 될 때에는 폐회로나 돌출부가 위로 튀어 나온 Spade형태의 승인된 배선 터미네이션들을 사용하세요.

이 터미네이션들은 배선들을 위해 적절한 크기여야 하고, 절연체와 도체 모두를 고정시킬 수 있어야 합니다.

Waarschuwing

Wanneer geslagen bedrading vereist is, dient u bedrading te gebruiken die voorzien is van goedgekeurde aansluitingspunten, zoals het gesloten-lus type of het grijperschop type waarbij de aansluitpunten omhoog wijzen. Deze aansluitpunten dienen de juiste maat voor de draden te hebben en dienen zowel de isolatie als de geleider vast te klemmen.

DC Power Disconnection



Warning!

Before performing any of the following procedures, ensure that power is removed from the DC circuit.

警告

次の手順を開始する前に、DC回路から電源が切断されていることを確認してください。

警告

進行以下任一操作程序前，請確保直流電路已斷電。

警告

请在进行以下任一操作程序前，确保直流电路的电源已经断开。

Warnung

Vor Ausführung der folgenden Vorgänge ist sicherzustellen, daß die Gleichstromschaltung keinen Strom erhält.

¡Advertencia!

Antes de proceder con los siguientes pasos, comprobar que la alimentación del circuito de corriente continua (CC) esté cortada (OFF).

Attention

Avant de pratiquer l'une quelconque des procédures ci-dessous, vérifier que le circuit en courant continu n'est plus sous tension.

אזהרה !

לפני ביצוע אחת הפעולות הבאת, ודא כי אספקת החשמל למעגל הזרם הישר DC הינה מנותקת.

تحذير

عندما يكون مطلوبا الأسلاك الذين تقطعت بهم السبل، واستخدام الأسلاك إنهاء المواقفة على، مثل حلقة مغلقة أو الأشياء بأسمائها الحقيقية النوع مع العروات مقلوبة. وينبغي لهذه الإنهاءات يكون الحجم المناسب للأسلاك ويجب كبح كل من العزل وموصل.

주의!

다음 절차들을 수행하기 전에, 전원이 DC회로로부터 제거되었는지를 확인해 주십시오.

Waarshuwing

Wanneer geslagen bedrading vereist is, dient u bedrading te gebruiken die voorzien is van goedgekeurde aansluitingspunten, zoals het gesloten-lus type of het grijperschop type waarbij de aansluitpunten omhoog wijzen. Deze aansluitpunten dienen de juiste maat voor de draden te hebben en dienen zowel de isolatie als de geleider vast te klemmen.

Hazardous Voltage or Energy Present on DC Power Terminals



Warning!

Hazardous voltage or energy may be present on DC power terminals. Always replace cover when terminals are not in service. Be sure uninsulated conductors are not accessible when cover is in place.

警告

直接電力端子に危険な電圧やエネルギーが発生している可能性があります。使用していない端子には常にカバーをつけてください。カバーがついているときは非絶縁形コンダクターに接触していないことを確認してください。

警告

直流電源終端可能產生危險的電壓或能量。終端不使用時，請務必蓋上機蓋。當蓋上機蓋，確認不絕緣導體無法使用。

警告

直流电源终端可能会产生危险的电压或能量。终端不使用时，请务必盖上机盖。机盖盖上后，请确保导体未绝缘部分无法使用。

Warnung

In mit Gleichstrom betriebenen Terminals kann es zu gefählicher Spannung kommen. Die Terminals müssen abgedeckt werden, wenn sie nicht in Betrieb sind. Stellen Sie bei Benutzung der Abdeckung sicher, dass alle nicht isolierten, stromführenden Kabel abgedeckt sind.

¡Advertencia!

Puede haber energía o voltaje peligrosos en los terminales eléctricos de CC. Reemplace siempre la cubierta cuando no estén utilizándose los terminales. Asegúrese de que no haya acceso a conductores descubiertos cuando la cubierta esté colocada.

Attention

Le voltage ou l'énergie électrique des terminaux à courant continu peuvent être dangereux. Veillez à toujours replacer le couvercle lors les terminaux ne sont pas en service. Assurez-vous que les conducteurs non isolés ne sont pas accessibles lorsque le couvercle est en place.

אזהרה!

מקור מתח מסוכן עלול להיות נוכח על הקטבים של זרם ה-DC. החלף תמיד את המכסה כאשר הקטבים לא בשימוש. ודא כי המוליכים הלא מבודדים אינם נגישים כאשר המכסה נמצא במקומו.

تحذير

قد الجهد الخطرة أو الطاقة تكون موجودة على محطات الطاقة العاصمة. استبدال غطاء دائما عندما المحطات ليست في الخدمة. مما ال شك فيه الموصلات غير معزول ال يمكن الوصول إليها عندما الغطاء في مكانه.

주의!

DC전원 단자들에 위험한 전압이나 에너지가 발생할 수 있습니다.

단말기들을 운영하지 않을 때에는 덮개로 다시 덮어 놓아 주십시오. 덮개가 제자리에 있어야만 절연되지 않은 도체들의 접근을 막을 수 있습니다.

Waarshuwing

Op DC-aansluitingspunten kunnen zich gevaarlijke voltages of energieën voordoen. Plaats altijd de afsluiting wanneer de aansluitingspunten niet worden gebruikt Zorg ervoor dat blootliggende contactpunten niet toegankelijk zijn wanneer de afsluiting is geplaatst.

Chapter3

System Interface

3-1 Overview

The chassis includes:

- A control panel on the front that includes power buttons and status monitoring lights
- Status lights on externally accessable hard drives
- Status lights for the power supply

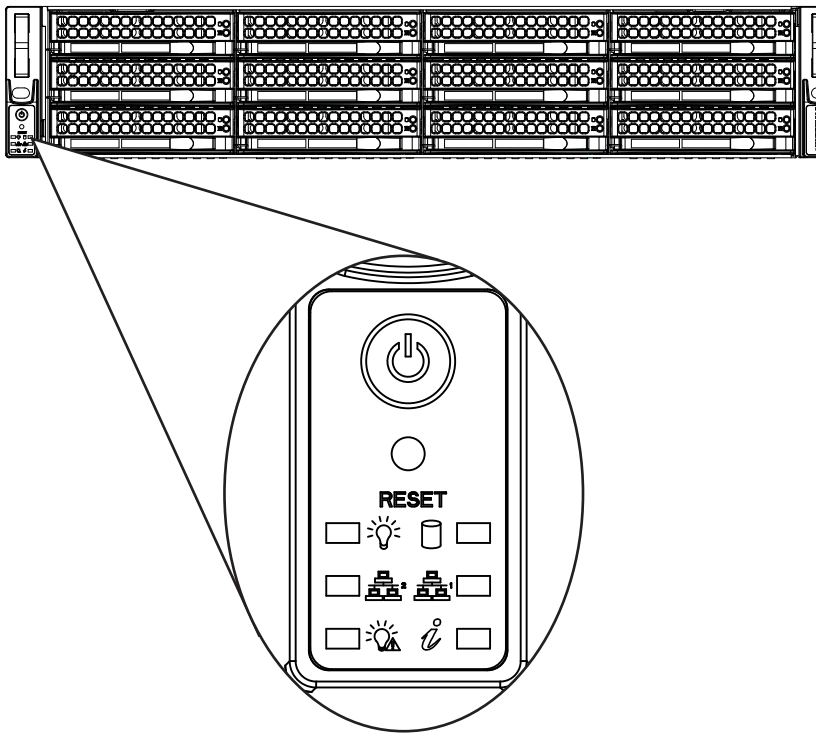

Figure 4-1. Control Panel

3-2 Control Panel Buttons

The chassis includes two push-buttons that control power to the system.



Power: The main power switch is used to apply or remove power from the power supply to the server. Turning off system power with this button removes the main power but maintains standby power. To perform many maintenance tasks, you must unplug system before servicing.



Reset: The reset button is used to reboot the system.

3-3 Control Panel LEDs

There are six LEDs that provide status information about the system.



Power: Indicates power is being supplied to the system power supply units. This LED should normally be illuminated when the system is operating.



HDD: Indicates IDE channel activity on the hard drive when flashing.



NIC2: Indicates network activity on GLAN2 when flashing.



NIC1: Indicates network activity on GLAN1 when flashing.



Power Fail: Indicates a power supply module has failed.



Information LED: Alerts operator of several states, as noted in the table below.

Information LED	
Status	**Description**
Continuously on and red	An overheat condition has occured. (This may be caused by cable congestion.)
Blinking red (1Hz)	Fan failure, check for an inoperative fan.
Blinking red (0.25Hz)	Power failure, check for a non-operational power supply.
Solid blue	Local UID has been activated. Use this function to locate the server in a rack mount environment.
Blinking blue	Remote UID is on. Use this function to identify the server from a remote location.

Overheating

There are several possible responses if the system overheats.

Overheat Temperature Setting

Some backplanes allow the overheat temperature to be set at 45, 50, or 55 degrees by changing a jumper setting. For more information, consult the backplane user manual on the Supermicro website.

Responses

If the server overheats

1. Use the LEDs to determine the nature of the overheating condition.
2. Confirm that the chassis covers are installed properly.
3. Check the routing of the cables and make sure all fans are present and operating normally.
4. Verify that the heatsinks are installed properly.

3-4 Drive Carrier LEDs

The chassis includes externally accessable SAS/SATA drives. Each drive carrier displays two status LEDs on the front of the carrier.

- **Green**: When illuminated, this LED indicates drive activity. It blinks on and off when that particular drive is being accessed This function is controlled by the backplane.
- **Red**: When illuminated, this LED indicates a drive failure. You should be notified by your system management software.

3-5 Power Supply LEDs

On the rear of the power supply module, an LED displays the status.

- **Solid Green**: When illuminated, indicates that the power supply is on.
- **Solid Amber**: When illuminated, indicates the power supply is plugged in and turned off, or the system is off but in an abnormal state.
- **Blinking Amber**: When blinking, this system power supply temperature has reached 63°C. The system will automatically power-down when the power supply temperature reaches 70°C and restarts when the power supply temperature goes below 60°C.

Chapter 4

Chassis Setup and Maintenance

This chapter covers the steps required to install components and perform maintenance on the chassis. The only tool required is a Phillips screwdriver.

Note and heed the warnings and precautions listed in Chapter 2: Warning Statements for AC/DC Systems, and those listed in the setup instructions.

4-1 Removing Power from the System

Before performing most setup or maintenance tasks, use the following procedure to ensure that power has been removed from the system.

1. Use the operating system to power down the system <or node>, following the on-screen prompts.

2. After the system has completely shut-down, carefully grasp the head of the power cord and gently pull it out of the back of the power supply. Remove the cords from both power supply modules.

3. Disconnect the cord from the power strip or wall outlet.

4-2 Removing the Chassis Cover

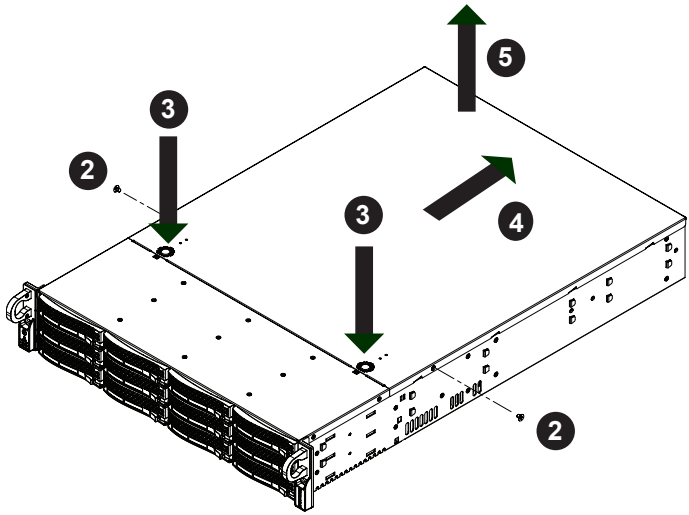

Figure 4-1. Removing the Chassis Cover

Removing the Chassis Cover

1. Power down the server as descrbed in section 4-1, lay the chassis on a flat stable surface and remove the chassis cover.
2. Remove the two screws from the sides of the chassis cover.
3. Press the release tabs to remove the cover from the locked position. Press both tabs at the same time.
4. Once the top cover is released from the locked position, slide the cover toward the rear of the chassis.
5. Lift the cover off the chassis.

Caution: Except for short periods of time, do not operate the system without the cover in place. The chassis cover must be in place to allow proper airflow and prevent overheating.

4-3 Installing Hard Drives

The SC826 chassis supports twelve hot-swappable 3.5" hard drives, which may be removed without powering-down the system. The drives are mounted in drive carriers to simplify their installation and removal from the chassis. These carriers also help promote proper airflow for the drive bays.

The SC826B models also support an optional a 2.5" hard drive cage, which holds up to two additional 2.5" hard drives. (Instructions on the following pages.)

Removing a 3.5" Hard Drive Carrier

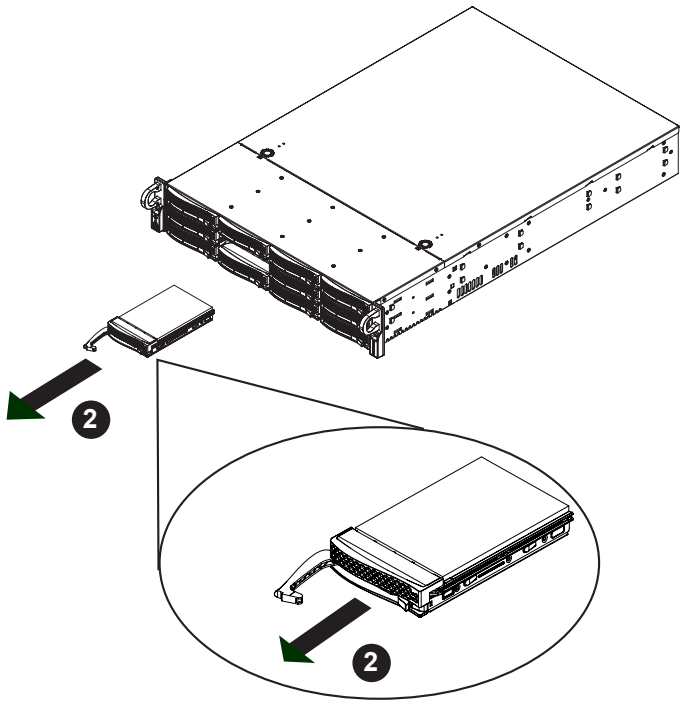

Figure 4-2. Removing a Hard Drive Carrier

Removing Hard Drive Carriers

1. Press the release button on the drive tray. This extends the drive bay handle.
2. Use the handle to pull the drive out of the chassis.

Installing 3.5" Hard Drives

Caution: Except for short periods of time (swapping hard drives), do not operate the server with the hard drive bays empty.

Note: Your operating system must have RAID support to enable the hot-swap capability of the drives.

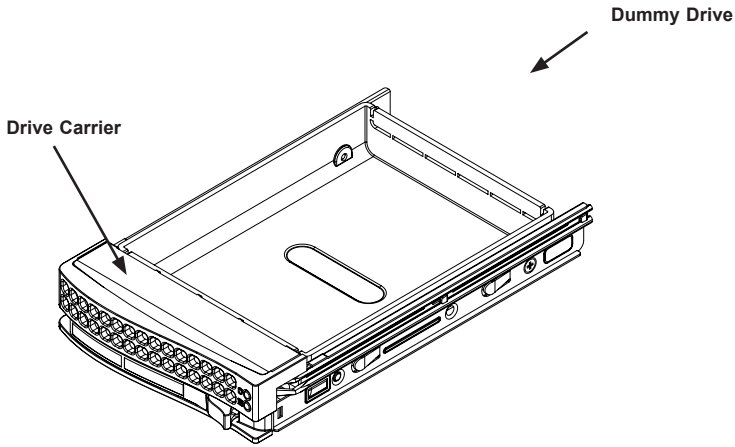

Figure 4-3. Dummy Drive in a Drive Carrier

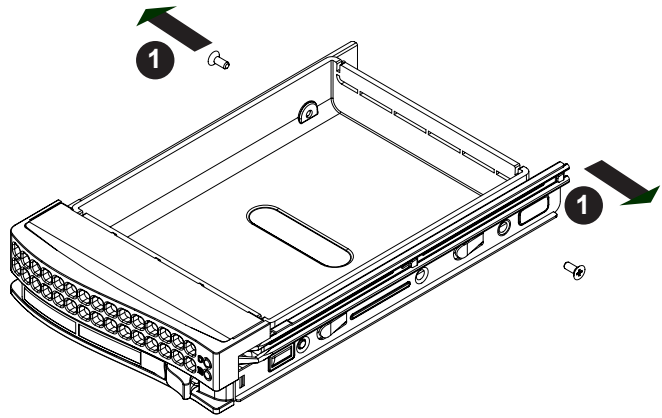

Figure 4-4. Removing the Dummy Drive from the Carrier

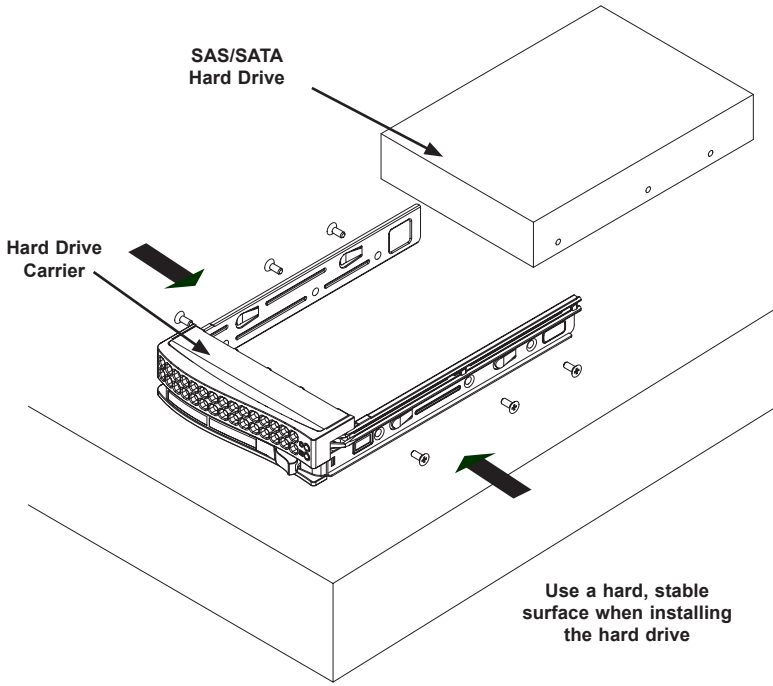

Figure 4-5. Installing a Drive into the Carrier

Installing a Hard Disk Drive

1. Remove the two screws connecting the dummy drive to the carrier.
2. Remove the dummy dirve from the carrier.
3. Place the hard drive carrier on a flat, stable surface such as a desk, table, or work bench.
4. Slide the hard drive into the carrier with the printed circuit board side facing down.
5. Carefully align the mounting holes in the hard drive and the carrier. Make sure the bottom of the hard drive and bottom of the hard drive carrier are flush.
6. Secure the hard drive using all six screws.
7. Replace the drive carrier into the chassis. Make sure to close the drive tray using the drive carrier handle.

Installing the Rear 2.5" Hard Drive Cage (SC826B Only)

The SC826B model chassis supports an optional hard drive cage for two additional 2.5" hot-swappable hard drives. The hard drive cage installs in the rear of the chassis next to the power supply. Once the hard drive cage has been installed, the 2.5" hard drives may be removed without powering down the server.

Installing the 2.5" Rear Hard Drive Cage

1. Power down as described in section 4-1, lay the chassis on a flat, stable surface and remove the chassis cover.

2. Orient the 2.5" rear hard drive cage as shown, aligning the opening at the end of the cage with the opening at the back of the chassis.

3. Place the hard drive cage into the chassis.

4. Secure the front of the hard drive cage to the chassis by fastening one screw inside the opening of the hard drive cage as illustrated.

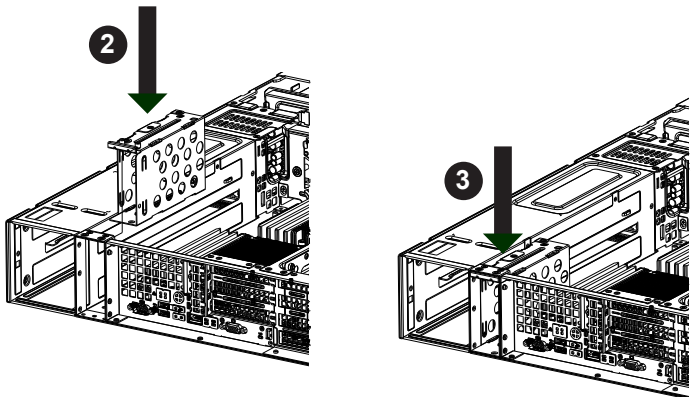

Figure 4-6. Installing the Rear 2.5" Hard Drive Cage

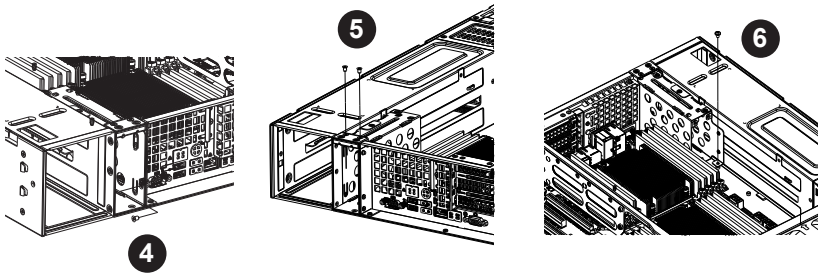

Figure 4-7. Securing the Rear Hard Drive Cage to the Chassis

5. Secure the top of the hard drive cage to the chassis frame with two screws, fastened at the upper edge of the hard drive cage above the opening of the hard drive cage.

6. Secure the back of the hard drive cage to the chassis with one screw as shown above.

7. Replace the power cords and power up the server.

Installing the Rear Drives Into Carriers (SC826B Only)

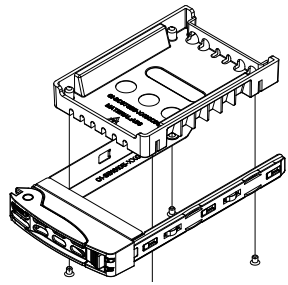

Figure 4-8. Removing the Dummy Drive from the Drive Carrier

Installing a Hard Drive into a 2.5" Rear Drive Carrier

1. Insert a hard drive into the carrier with the PCB side facing down and the connector end toward the rear of the carrier.

2. Align the drive in the carrier so that the mounting holes of both are aligned. Note that there are holes in the carrier marked "SAS" or “SATA” to aid in correct installation.

3. Secure the drive to the carrier with four screws. Use the four M3 flat-head screws included in the HDD bag of your accessory box. Note that the screws used to secure the dummy drive to the tray cannot be used to secure the hard drive.

4. Insert the drive and carrier into its bay vertically, keeping the carrier oriented so that the release button is on the bottom. When the carrier reaches the rear of the bay, the release handle will retract.

5. Using the thumb, push against the upper part of the drive handle. Push the drive and carrier into the bay as illustrated below, until the carrier clicks into the locked position.

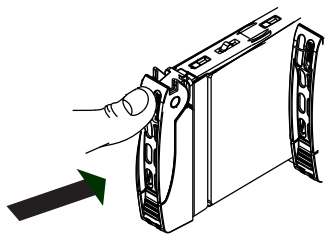

Figure 4-9. Installation of the Hard Drive into the Rear Cage Bay

4-4 Installing the Motherboard

Riser Card Bracket (W or U Models only)

Some SC826 models incorporate riser cards to accept full height expansion cards. This riser card is mounted on a chassis bracket that, if it is installed, must be removed before installing the motherboard. See section 4-5 for more information.

I/O Shield

The I/O shield holds the motherboard ports in place. Install the I/O shield before installing the motherboard.

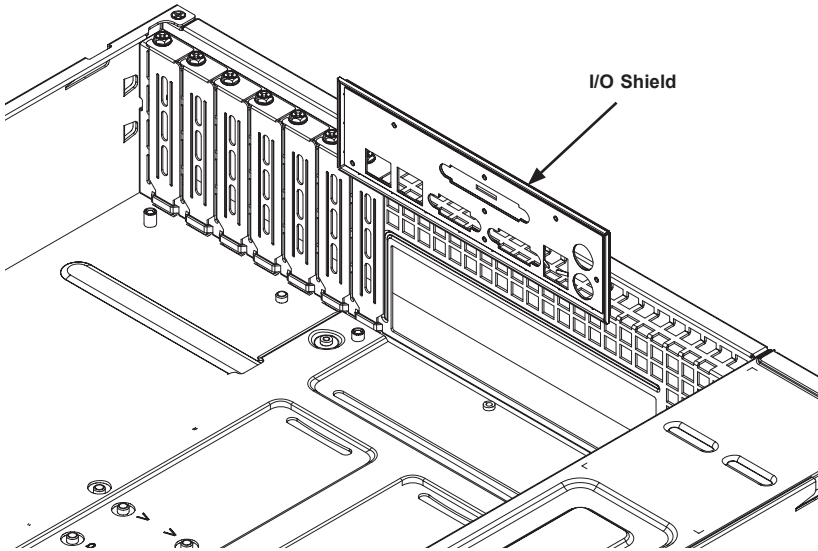

Figure 4-10. I/O Shield Placement

Installing the I/O Shield

1. Review the documentation that came with your motherboard. Become familiar with component placement, requirements, and precautions.

2. Power down as described in section 4-1, lay the chassis on a flat, stable surface and remove the chassis cover.

3. With the illustrations facing the outside of the chassis, place the shield into the space provided.

Permanent and Optional Standoffs

Standoffs prevent short circuits by securing space between the motherboard and the chassis surface. The chassis includes permanent standoffs in locations used by most motherboards. These standoffs accept the rounded Phillips head screws included in the accessories packaging.

Some motherboards require additional screws for heatsinks, general components and/or non-standard security. Optional standoffs are included to these motherboards. To use an optional standoff, you must place the hexagonal screw through the bottom the chassis and secure the screw with the hexagon nut (rounded side up).

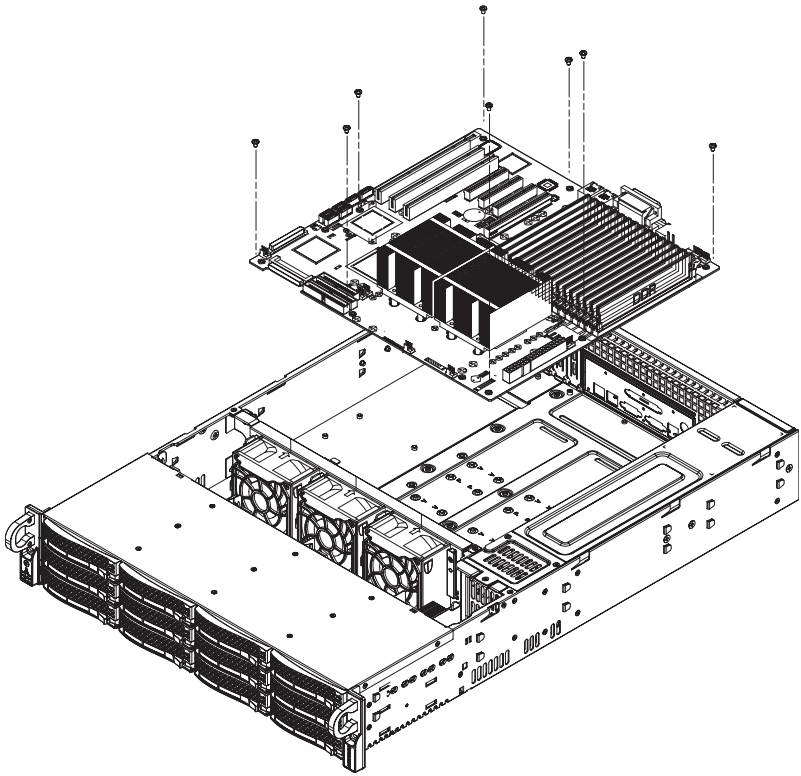

Figure 4-11. Chassis Standoffs

Installing the Motherboard

Installing the Motherboard

1. Review the documentation that came with your motherboard. Become familiar with component placement, requirements, precautions, and cable connections.

2. Lay the chassis on a flat, stable surface and remove the chassis cover.

3. As required by your motherboard, install standoffs in any areas that do not have a permanent standoff. To do this:
   a. Place a hexagonal standoff screw through the bottom the chassis.
   b. Secure the screw with the hexagon nut (rounded side up).
4. Compare the mounting holes in the motherboard with those in the chassis, then add and remove standoffs as needed.

5. Secure the motherboard to the chassis using the rounded, Phillips head screws. Do not exceed eight inch-pounds of torque.

6. Secure the CPU(s), heatsinks, and other components to the motherboard as described in the motherboard documentation.

7. Connect the cables between the motherboard, backplane, chassis, front panel, and power supply, as needed. The fans may be temporarily removed to allow access to the backplane ports.

8. Replace the cover and power cords, and then power up the server.

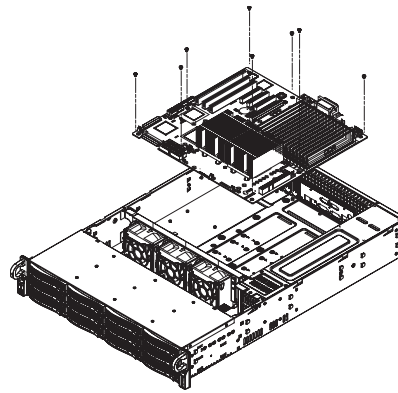

Figure 4-12. Installing the Motherboard

4-5 Installing Expansion Cards

For the LP models, such as SC826BE1C-R920LPB, the chassis slots are vertical and allow the addition of low profile expansion cards. For the W models such as SC826BE1C-R920WB, and the U models such as SC826E16-R1200UB, the chassis slots are horizontal. The U models allow a Supermicro universal I/O (UIO) card in addition to expansion cards.

The motherboard must be installed before expansion cards.

Expansion Cards for an LP Model Chassis

The LP model chassis includes seven slots for expansion cards.

Installing an Expansion Card for an LP Model Chassis

1. Power down the system as described in Section 4-1 and remove the cover.

2. In the rear of the chassis, remove the blank PCI shield that is pre-installed covering the expansion slot.

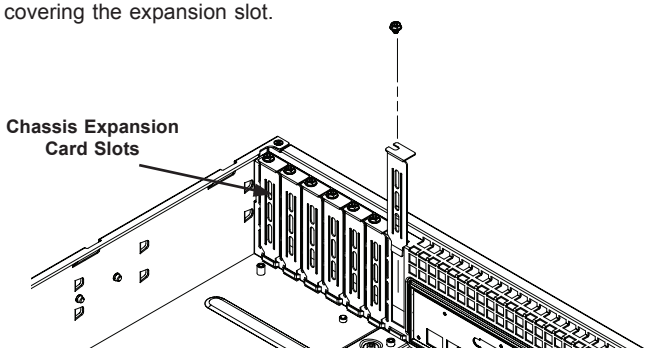

Figure 5-11. Remove an LP Expansion Card Slot Shield

3. Slide the expansion card into the expansion slot on the motherboard while aligning it with the chassis slot in the rear of the chassis.

4. Secure the expansion card shield onto the rear of the chassis with a screw.

Expansion Cards for a W or U Model Chassis

The W or U model chassis accomodates expansion cards using riser cards. If your motherboard supports a Supermicro universal I/O (UIO) card, the U model chassis supports an additional three full-height expansion cards and three low profile expansion cards. If the motherboard does not support a UIO, then the W model chassis supports four full-height expansion cards and three low profile expansion cards.

Installing a UIO Card

1. Power down the system as described in Section 4-1 and remove the cover.

2. Release the clamp that secures all four full-height PCI shields (Figure 5-13). Looking at the rear of the chassis, this clamp is in the right corner. Unscrew the single screw that secures the clamp and rotate the clamp away from the shields. Remove the blank PCI shield covering the expansion slot in the chassis.

3. Place the UIO card horizontally in the rear left area of the chassis bottom and insert it into the UIO slot in the motherboard, while aligning it with slot in the rear of the chassis.

4. Secure the shield to the rear of the chassis with the lever.

Installing an Expansion Card for a W or U Model Chassis

1. If this is the first expansion card, start by locating the *riser card bracket* in your chassis accessory bag, and one or two riser cards, which are purchased separately. One riser card accomodates the full-height expansion cards and another riser card accomodates the three low profile expansion cards.

2. Power down the system as described in Section 4-1 and remove the cover.

3. Attach the riser card(s) to the riser card bracket using screws. Note that there are different cards for the right and left side of the bracket.

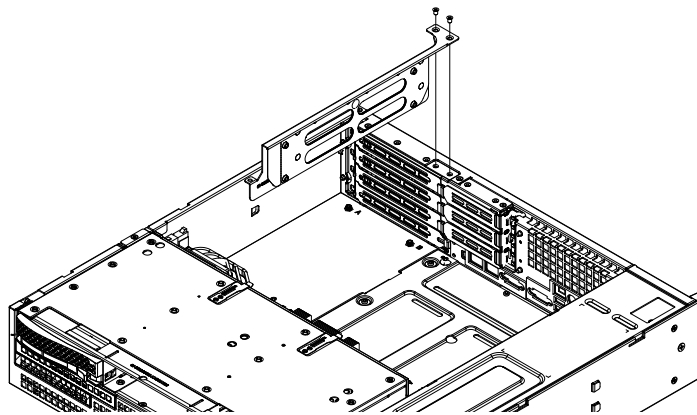

Figure 5-12. Riser Card Bracket

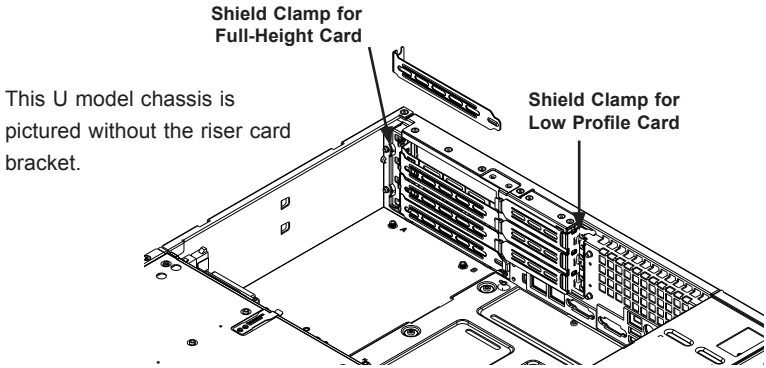

Figure 5-13. Remove an Expansion Card Slot Shield

4. Insert the riser card(s) into the motherboard expansion slot(s) while aligning the riser card bracket with the rear of the chassis. Secure the bracket with screws (Figure 5-12).

5. For a **full-height** extension card, release the clamp that secures all four PCI shields. Looking at the rear of the chassis, this clamp is in the right corner. Unscrew the single screw that secures the clamp and rotate the clamp away from the shields.

   For a **low profile** extension card, release the box-shaped clamp that secures all three PCI shields. Looking at the rear of the chassis, this clamp is near the middle, just left of the low profile PCI slots. Unscrew the single screw that secures the clamp and slide the clamp to the left away from the shields.

6. Insert the expansion card into a slot on the riser card while aligning the expansion card backplate with the open slot in the rear of the chassis. Repeat for other expansion cards if you are installing more than one.

7. Secure the card backplates to the chassis by returning the clamp to the closed position and installing the locking screw.

8. Replace the chassis cover and power up.

4-6 Installing the Air Shroud

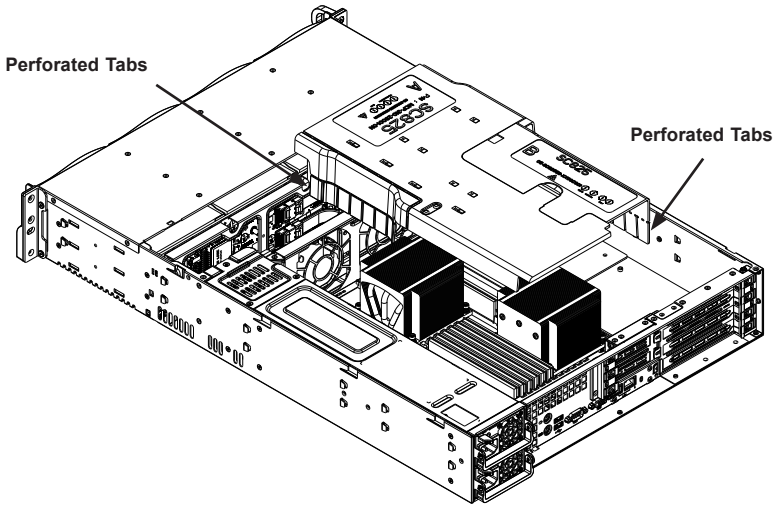

Figure 4-14. Air Shroud

Air shrouds concentrate airflow to maximize fan efficiency. The SC826 chassis air shroud does not require screws to set it up.

Installing the Air Shroud

1. Power down the server as desscribed in section 4-1, lay the chassis on a flat, stable surface and remove the chassis cover.

2. If necessary, move any cables that interfere with the air shroud placement.

3. Place the air shroud in the chassis. The air shroud fits just behind the two fans closest to the power supply. Slide the air shroud into the grooves just behind the fan rack.

4. If necessary, the perforated tabs on either side of the air shroud may be removed to ensure a proper fit.

Note that if a 16 DIMM (13.68" x 13") motherboard is used, it is necessary to use the optional MCP-310-82502-0N air shroud. For ordering information, visit the Supermicro website and click on the "Where to Buy" link.

Checking the Airflow

Checking the Server's Airflow

- Make sure there are no objects to obstruct airflow in and out of the server. In addition, if you are using a front bezel, make sure the bezel's filter is replaced periodically.
- Do not operate the server without drives or drive carriers in the drive bays. Use only recommended server parts.
- Make sure no wires or foreign objects obstruct air flow through the chassis. Pull all excess cabling out of the airflow path or use shorter cables.

The control panel LEDs inform you of system status. See “Chapter 3: System Interface” for details on the LEDs and the control panel buttons.

4-7 System Maintenance

In most cases, the chassis power supply and fans are pre-installed. Procedures to replace them follow.

System Fans

Three heavy-duty fans provide cooling for the chassis.

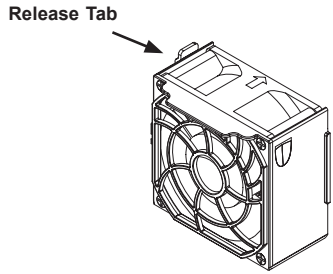

Figure 4-15. System Fan

Replacing a System Fan

1. If necessary, open the chassis while the power is running to determine which fan requires changing. Never run the server for an extended period of time with the chassis open.

2. Power down the server as described in section 4-1, lay the chassis on a flat, stable surface and remove the chassis cover.

3. Remove the failed fan's power cord from the motherboard.

4. Press the fan release tab to lift the failed fan from the fan tray and pull it completely from the chassis.

5. Place the new fan into the vacant space in the fan tray, while making sure the arrows on the top of the fan (indicating air direction) point in the same direction as the arrows on the other fans.

6. Power up the system and check that the fan is working properly before replacing the chassis cover.

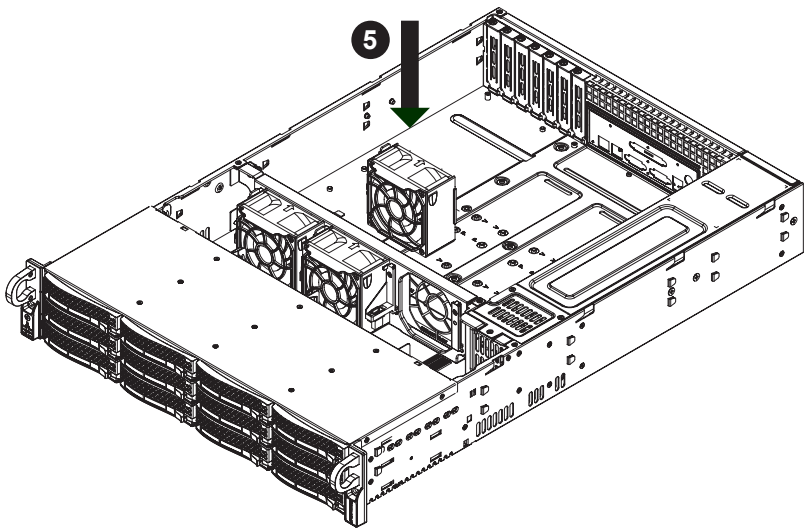

Figure 4-16. Placing the System Fan in the Chassis

Power Supply

The system has two redundant, hot-swap power supply modules. They automatically sense the input voltage between 100v to 240v, and operate at that voltage. An amber light on the power supply is illuminated when the power is switched off. An green light indicates that the power supply is operating.

Replacement units can be ordered directly from Supermicro.

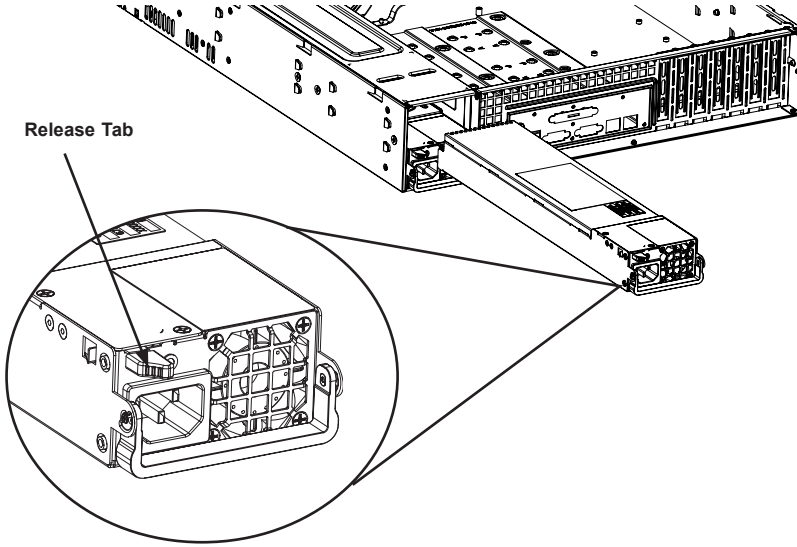

Figure 4-17. Removing the Power Supply

Changing the Power Supply

1. Remove the AC power cord from the back of the power supply module that you want to replace.
2. Push the release tab on the rear of the power supply.
3. Pull the module out of the power supply bay using the handle.
4. Push the new power supply module into the power bay until it clicks.
5. Plug the AC power cord back into the module and power up the server.

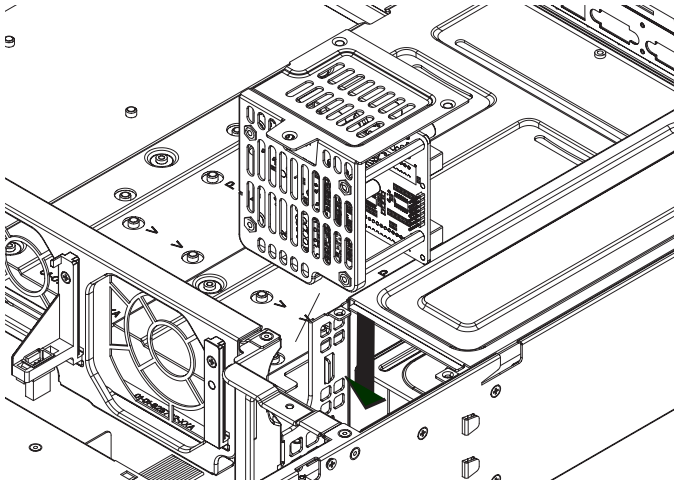

Figure 4-20: Replacing the Power Distributor

Power Distributor

Chassis that are 2U or more in height require a power distributor. The power distributor provides failover and power supply redundancy.

Changing the Power Distributor

1. Power down the server as described in section 4-1, lay the chassis on a flat, stable surface and remove the chassis cover.

2. Remove all cable connections to the power supply from the motherboard, backplane, and other components.

3. Remove both power supplies.

4. Locate the power distributor between the power supply and the fan row.

5. Remove the three screws securing the power supply.

6. Gently pull the power distributor from the chassis, carefully guiding all the cables through the power distributor housing.

7. Slide the new power distributor module into the power distributor housing. Make that you slide the cables through the bottom of the housing.

8. Reconnect all the power cables, replace the power supply, and insert the plug into the wall.

Optional Front Bezel

The SC826 chassis supports an optional full-face locking front bezel for added security. It can be ordered separately from the Supermico web site referencing part number MCP-210-82601-0B.

Notes

Chapter 5

Rack Installation

This chapter provides instructions for preparing and mounting your chassis in a rack.

5-1 Unpacking the System

You should inspect the box the chassis was shipped in and note if it was damaged in any way. If the chassis itself shows damage, file a damage claim with the carrier who delivered it.

5-2 Preparing for Setup

Decide on a suitable location for the rack unit that will hold your chassis. It should be a clean, dust-free area that is well ventilated. Avoid areas where heat, electrical noise and electromagnetic fields are generated. A nearby grounded power outlet. is required

The box your chassis was shipped in should include two sets of rail assemblies, two rail mounting brackets and the mounting screws to mount the system into the rack. Please read this chapter in its entirety before beginning the installation procedure.

Choosing a Setup Location

- Leave at least 25 inches clearance in front of the rack to open the front door completely.
- Leave approximately 30 inches of clearance in the back of the rack to allow for sufficient airflow and access for servicing.
- It should be a restricted access location, such as a dedicated equipment room or a service closet.

5-3 Warnings and Precautions

Rack Precautions

- Ensure that the leveling jacks on the bottom of the rack are fully extended to the floor with the full weight of the rack resting on them.
- In single rack installations, stabilizers should be attached to the rack.
- In multiple rack installations, the racks should be coupled together.
- Always make sure that the rack is stable before extending a component from the rack.
- Only one chassis should be extended from the rack at a time. Extending two or more chassis simultaneously may cause the rack to become unstable.

General Server Precautions

- Review the electrical and general safety precautions that came with the components you are adding to your chassis.
- Determine the placement of each component in the rack *before* you install the rails.
- Install the heaviest server components on the bottom of the rack first, and then work upward.
- Use a regulating uninterruptible power supply (UPS) to protect the server from power surges, voltage spikes and to keep your system operating in case of a power failure.
- Allow the hot-swappable hard drives and power supply modules to cool before touching them.
- Always keep the rack's front door and all panels and components on the servers closed when not servicing to maintain proper cooling.

Rack Mounting Considerations

Ambient Operating Temperature

If installed in a closed or multi-unit rack assembly, the ambient operating temperature of the rack environment may be greater than the ambient temperature of the room. Therefore, consideration should be given to installing the equipment in an environment compatible with the manufacturer's maximum rated ambient temperature (TMRA).

Sufficient Airflow

Equipment should be mounted into a rack so that the amount of airflow required for safe operation is not compromised.

Circuit Overloading

Consideration should be given to the connection of the equipment to the power supply circuitry and the effect that any possible overloading of circuits might have on overcurrent protection and power supply wiring. Appropriate consideration of equipment nameplate ratings should be used when addressing this concern.

Reliable Ground

A reliable ground must be maintained at all times. To ensure this, the rack itself should be grounded. Particular attention should be given to power supply connections other than the direct connections to the branch circuit (i.e. the use of power strips, etc.).



Warning: To prevent bodily injury when mounting or servicing this unit in a rack, you must take special precautions to ensure that the system remains stable. The following guidelines are provided to ensure your safety:

- This unit should be mounted at the bottom of the rack if it is the only unit in the rack.
- When mounting this unit in a partially filled rack, load the rack from the bottom to the top with the heaviest component at the bottom of the rack.
- If the rack is provided with stabilizing devices, install the stabilizers before mounting or servicing the unit in the rack.
- Slide rail mounted equipment is not to be used as a shelf or a work space.

5-4 Installing the System into a Rack

This section provides information on installing the chassis into a rack unit with the rails provided. There are a variety of rack units on the market, which may mean that the assembly procedure will differ slightly from the instructions provided. You should also refer to the installation instructions that came with the rack unit you are using. **Note:** This rail will fit a rack between 26.5" and 36.4" deep.

Identifying the Sections of the Rack Rails

The chassis package includes two rail assemblies. Each assembly consists of three sections: An inner rail that secures directly to the chassis, an outer rail that secures to the rack, and a middle rail which extends from the outer rail. These assemblies are specifically designed for the left and right side of the chassis.

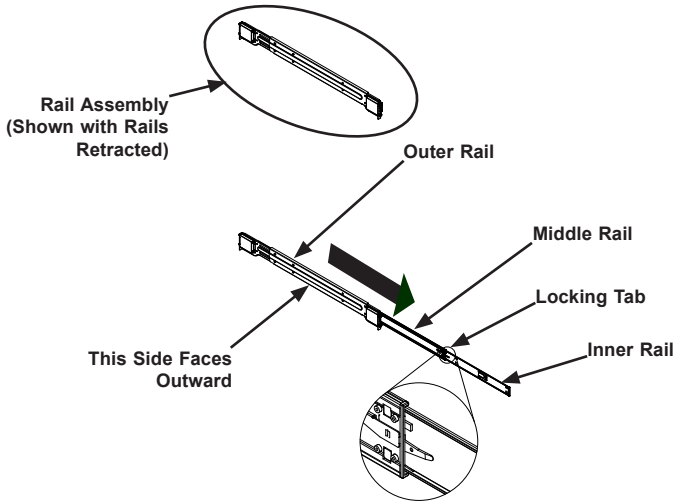

Figure 5-1. Identifying the Outer Rail, Middle Rail and Inner Rail
(Left Rail Assembly Shown)

Releasing the Inner Rail

Each inner rail has a locking latch. This latch prevents the server from coming completely out of the rack when when the chassis is pulled out for servicing.

To mount the rail onto the chassis, first release the inner rail from the outer rails.

Releasing Inner Rail from the Outer Rails

1. Pull the inner rail out of the outer rail until it is fully extended as illustrated below.
2. Press the locking tab down to release the inner rail.
3. Pull the inner rail all the way out.
4. Repeat for the other outer rail.

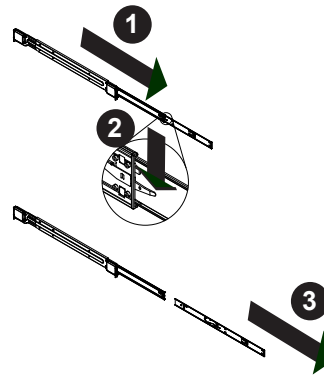

Figure 5-2. Extending and Releasing the Inner Rail

Installing the Inner Rails on the Chassis

Installing the Inner Rails

1. Identify the left and right inner rails. They are labeled.
2. Place the inner rail firmly against the side of the chassis, aligning the hooks on the side of the chassis with the holes in the inner rail.
3. Slide the inner rail forward toward the front of the chassis until the quick release bracket snaps into place, securing the rail to the chassis.
4. Optionally, you can further secure the inner rail to the chassis with a screw.
5. Repeat for the other inner rail.

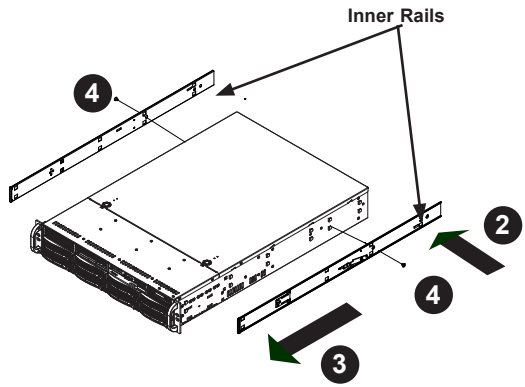

Figure 5-3. Installing the Inner Rails

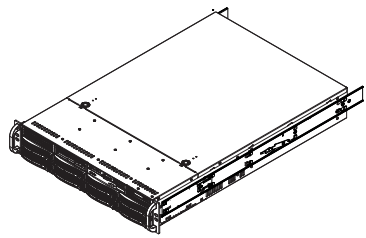

Figure 5-4. Inner Rails Installed on the Chassis

Installing the Outer Rails onto the Rack

Installing the Outer Rails

1. Press upward on the locking tab at the rear end of the middle rail.
2. Push the middle rail back into the outer rail.
3. Hang the hooks on the front of the outer rail onto the square holes on the front of the rack. If desired, use screws to secure the outer rails to the rack.
4. Pull out the rear of the outer rail, adjusting the length until it just fits within the posts of the rack.
5. Hang the hooks of the rear section of the outer rail onto the square holes on the rear of the rack. Take care that the proper holes are used so the rails are level. If desired, use screws to secure the rear of the outer rail to the rear of the rack.

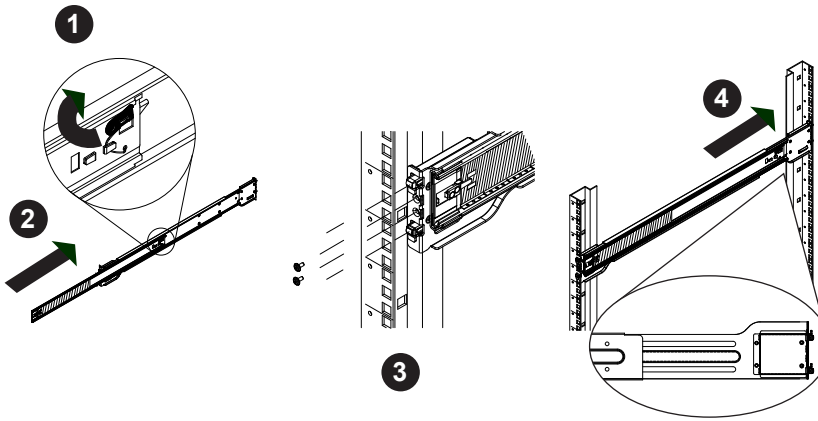

Figure 5-5. Extending and Mounting the Outer Rails

Stability hazard. The rack stabilizing mechanism must be in place, or the rack must be bolted to the floor before you slide the unit out for servicing. Failure to stabilize the rack can cause the rack to tip over.

Do not use a two post "telco" type rack.

Sliding the Chassis onto the Rack Rails

Warning: Mounting the system into the rack requires at least two people to support the chassis during installation. Please follow safety recommendations printed on the rails.

Installing the Chassis into a Rack

1. Extend the outer rails as illustrated above.
2. Align the inner rails of the chassis with the outer rails on the rack.
3. Slide the inner rails into the outer rails, keeping the pressure even on both sides. When the chassis has been pushed completely into the rack, it should click into the locked position.
4. Optional screws may be used to hold the front of the chassis to the rack.

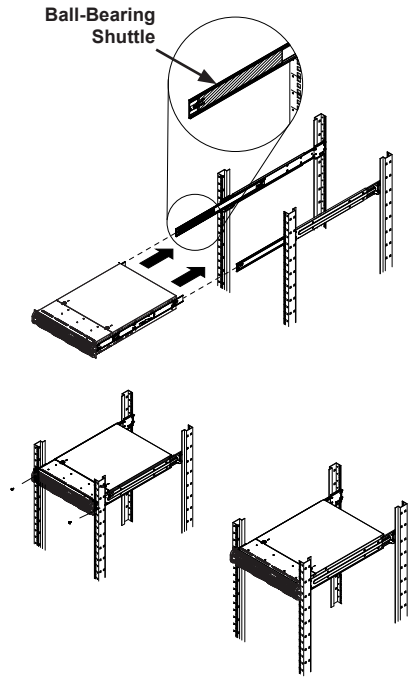

Figure 5-6. Installing into a Rack

Note: The figure above is for illustrative purposes only. Always install servers to the bottom of the rack first.

Caution: Do not pick up the server with the front handles. They are designed to pull the system from a rack only.

Appendix A

SC826 Chassis Cables

A-1 Overview

This appendix lists supported cables for your chassis system. It only includes the most commonly used components and configurations. For more compatible cables, refer to the manufacturer of the motherboard you are using and our Web site at: www.supermicro.com.

A-2 Cables Included with SC826 Chassis (SAS/SATA)

Part #	Type	Length	Description
CBL-0087	Cable	50.8 cm (20")	Round 16-pin to 16-pin ribbon front panel cable
CBL--0160L	Cord		US power cord 16 AWG, PB free
CBL-0217L	Cable		16-pin control panel converter cable for SC826 PBF
CBL-0157L	Cable	22.86 cm (9")	8 pin to 8 pin ribbon cable for SGPIO, PB free
CBL-0191L	Cable	50 cm (19.685")	20-pin to 20-pin cable for control panel
CBL-0139L	Wire	50 cm (19.685")	IDE 80-Wire cable for DVD ROM
-	Cable	182.88 cm (6')	Two regional power cords
CBL-0180L	SATA	varies	Set for four SATA cables. Length varied to minimize airflow interference.
CBL-0078	Cable	45 cm (17.7165")	Round floppy cable

A-3 Compatible Cables

These cables are compatible with the SC826 chassis.

Alternate SAS/SATA Cables

Some compatible motherboards have different connectors. If your motherboard has only one SAS connector that the SAS/SATA cables must share, use one of the following cables. These cables must be purchased separately.

Cable Name: SAS Cable **Quantity:** 1

Part #: CBL-0175L
Alt. Name: "Big Four"

Description: This cable has one SFF-8484 (32-pin) connector on one end and four SAS connectors (seven pins each) at the other. This cable connects from the Host (motherboard or other controller) to the backplane SAS hard drive port.

Cable Name: SAS Cable **Quantity:** 1

Part #: CBL-0116
Alt. Name: iPass or "Small Four"

Description: This cable has one iPass (SFF-8087/Mini-SAS) connector (36-pin) at one end and four SAS connectors on the other end. This cable connects from the host (motherboard or other controller) to the backplane SAS hard drive port.

Extending Power Cables

Although Supermicro chassis are designed to be efficient and cost-effective, some compatible motherboards have power connectors located in different areas.

To use these motherboards it may be necessary to extend the power cables to the motherboards. To do this, use the following chart as a guide.

Power Cable Extenders		
Number of Pins	**Cable Part #**	**Length**
24-pin	CBL-0042	7.9” (20 cm)
20-pin	CBL-0059	7.9” (20 cm)
8-pin	CBL-0062	7.9”(20 cm)
4-pin	CBL-0060	7.9”(20 cm)

Front Panel to the Motherboard

The SC826 chassis includes a cable to connect the chassis front panel to the motherboard. If your motherboard uses a different connector, use the following list to find a compatible cable.

Front Panel to Motherboard Cable (Ribbon Cable)		
Number of Pins (Front Panel)	**Number of Pins (Motherboard)**	**Cable Part #**
16-pin	16-pin	CBL-0049
16-pin	20-pin	CBL-0048
20-pin	20-pin	CBL-0047
16-pin	various*	CBL-0068
20-pin	various*	CBL-0067

* Split cables: Use these cables if your motherboard requires several different connections from the front panel.

Notes

Appendix B

SC826 Power Supply Specifications

This appendix lists power supply specifications for the SC826 chassis models.

	500W
MFR Part #	PWS-501P-1R
AC Input	100-240 V, 50-60 Hz, 6.1-2.6 Amp
DC Output	4 Amp @ +5V standby 41.7 Amp @ +12V
With Power Distributor	+5V: 30 Amp +3.3V: 24 Amp -12V: 0.6 Amp

	800W
MFR Part #	PWS-801-1R
Rated AC Voltage	100 - 240V 50 - 60Hz 10 - 4 Amp
+5V standby	4 Amp
+12V	66 Amp
+5V	30 Amp
+3.3V	24 Amp
-12V	0.6 Amp

	920W
MFR Part #	PWS-920P-SQ
AC Input	1000W Output @ 100-140V, 12-8A, 50-60Hz 1280W Output @ 180-240V, 8-6A, 50-60Hz
DC Output	1000W: +12V/83A; +5Vsb/4A 1280W: +12V/106.7A, +5Vsb/4A
With Power Distributor	+5V: 45 Amp +3.3V: 24 Amp +5Vsb: 6 Amp -12V: 0.6 Amp

	1200W
MFR Part #	PWS-1K21P-1R
AC Input	100 - 140V, 50 - 60Hz, 8 - 11 Amp 180 - 240V, 50 - 60Hz, 5.5 - 8 Amp
DC Output +12V	1000W, 83 Amp @ 100 -140V 1200W, 100 Amp @ 180 - 240V 5Vsb: 4A
DC Output with PDB	+5V: 50 Amp +3.3V: 30 Amp -12V: 0.6 Amp

	1280W
MFR Part #	PWS-1K28P-SQ
AC Input	1000W Output @ 100-140V, 12-8A, 50-60Hz 1280W Output @ 180-240V, 8-6A, 50-60Hz
DC Output	1000W: +12V/83A; +5Vsb/4A 1280W: +12V/106.7A, +5Vsb/4A

Appendix C

BPN-SAS-826TQ Backplane Specifications

C-1 ESD Safety Guidelines

Electrostatic Discharge (ESD) can damage electronic components. To prevent damage to your system, it is important to handle it very carefully. he following measures are generally sufficient to protect your equipment from ESD.

- Use a grounded wrist strap designed to prevent static discharge.
- Touch a grounded metal object before removing a component from the antistatic bag.
- Handle the backplane by its edges only; do not touch its components, peripheral chips, memory modules or gold contacts.
- When handling chips or modules, avoid touching their pins.
- Put the card and peripherals back into their antistatic bags when not in use.

C-2 General Safety Guidelines

- Always disconnect power cables before installing or removing any components from the computer, including the BPN-SAS-826TQ backplane.
- Disconnect the power cable before installing or removing any cables from the BPN-SAS-826TQ backplane.
- Make sure that the SAS-826TQ backplane is securely and properly installed on the motherboard to prevent damage to the system due to power shortage.

C-3 An Important Note to Users

- All images and layouts shown in this user's guide are based upon the latest PCB Revision available at the time of publishing. The card you have received may or may not look exactly the same as the graphics shown in this manual.

C-4 Introduction to the BPN-SAS-826TQ Backplane

The BPN-SAS-826TQ backplane has been designed to utilize the most up-to-date technology available, providing your system with reliable, high-quality performance.

This manual reflects BPN-SAS-826TQ Revision 3.1, the most current release available at the time of publication. Always refer to the Supermicro Web site at www.supermicro.com for the latest updates, compatible parts and supported configurations.

To avoid personal injury and property damage, carefully follow all the safety steps listed below when accessing your system or handling the components.

C-5 Front Connectors

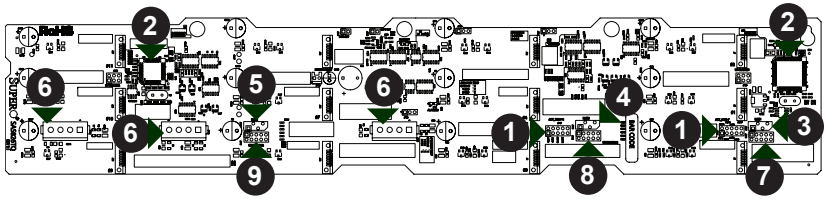

Figure C-1: Front Connectors

Front Connectors	SAS Ports
#1. ACT_IN: JP26 and JP47	#11. SAS Port #1 J6
#2. Chips: MG 9071 and MG 9072	#12. SAS Port #2 J7
#3. I²C Connector#1 JP37	#13. SAS Port #3 J8
#4. I²C Connector#2 JP95	#14. SAS Port #4 J10
#5. I²C Connector#3 JP52	#15. SAS Port #5 J12
#6. Power Connectors (4-pin): JP10, JP13, and JP46	#16. SAS Port #6 J14
	#17. SAS Port #7 J16
#7. SideBand Connector#1 JP66	#18. SAS Port #8 J22
#8. SideBand Connector#2 JP68	#19. SAS Port #9 J23
#9. SideBand Connector#3 JP75	#20. SAS Port #10 J24
#10. SAS Port #0 J5	#21. SAS Port #11 J25

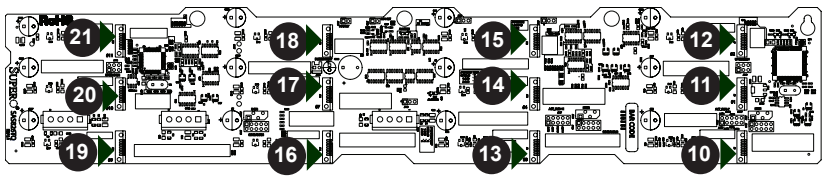

Figure C-2: Front SAS Ports

C-6 Front Connector and Pin Definitions

1. Activity LED Headers

The activity LED headers, designated JP26 and JP47, are used to indicate the activity status of each SAS drive. The activity LED headers are located on the front panel. For the activity lead headers to work properly, connect to them using a 10-pin LED cable. This is only used when the activity LED is not supported by the hard drive.

SAS Activity LED Header Pin Definitions

Pin #	Definition	Pin #	Definition
1	ACT IN#0	6	ACT IN#4
2	ACT IN#1	7	ACT IN#5
3	ACT IN#2	8	ACT IN#6
4	ACT IN#3	9	ACT IN#7
5	Ground	10	Empty

SAS Activity LED Header Pin Definitions

Pin #	Definition	Pin #	Definition
1	ACT IN#8	6	ACT IN#12
2	ACT IN#9	7	ACT IN#13
3	ACT IN#10	8	ACT IN#14
4	ACT IN#11	9	ACT IN#15
5	Ground	10	Empty

2. MG9071 and MG9072 Chips

The MG9071 and MG9072 are enclosure management chips that support the SES-2 controller and SES-2 protocols.

3., 4., 5. I²C Connectors

The I²C Connectors, designated JP37, JP52, and JP95, are used to monitor HDD activity and status. See the table on the right for pin definitions.

I²C Connector Pin Definitions

Pin#	Definition
1	Data
2	Ground
3	Clock
4	No Connection

6. Backplane Main Power Connectors

The 4-pin connectors, designated JP10, JP13, and JP46 provide power to the backplane. See the table on the right for pin definitions.

Backplane Main Power 4-Pin Connector	
Pin#	Definition
1	+12V
2 and 3	Ground
4	+5V

7., 8., 9. Sideband Headers

SGPIO is the default mode setting. The sideband headers are designated JP66, JP68, and JP75. For SES-2 to work properly, you must connect an 8-pin sideband cable. See the table to the right for pin definitions.

Sideband Headers			
Pin #	Definition	Pin #	Definition
2	SGPIO: SDIN; I^2C: Backplane Addressing	1	Controller ID (SB6)
4	SGPIO: SDOUT; I^2C: Reset	3	GND (SB2)
6	GND (SB3)	5	SGPIO: SLOAD; I^2C: SDA
8	Backplane ID (SB7)	7	SGPIO: SCLOCK; 1^2C: SCL
10	No Connection	9	No Connection

10. - 21. SAS Ports

The SAS ports are used to connect the SAS drive cables. The twelve ports are designated #0 - #11. Each port is also compatible with SATA drives.

C-7 Front Jumper Locations and Settings

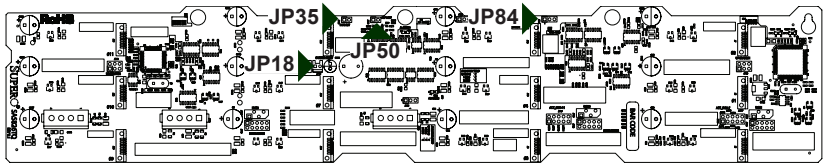

Figure C-3: Front Jumpers

Explanation of Jumpers

To modify the operation of the backplane, jumpers can be used to choose between optional settings. Jumpers create shorts between two pins to change the function of the connector. Pin 1 is identified with a square solder pad on the printed circuit board. **Note:** On two pin jumpers, "Closed" means the jumper is on and "Open" means the jumper is off the pins.

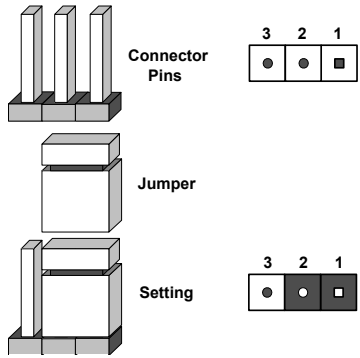

Jumper Settings		
Jumper	**Jumper Settings**	**Note**
JP35	Open: Default Closed: Reset	MG9072 Chip Reset #1
JP50	Open: Default Closed: Reset	MG9071 Chip Reset #2
JP18	Open: Default Closed: Reset	Buzzer Reset #2

I²C and SGPIO Modes and Jumper Settings

This backplane can utilize I²C or SGPIO. SGPIO is the default mode and can be used without making changes to your jumpers. The following information details which jumper must be configured to use SGPIO mode or restore your backplane to I²C mode.

Jumper Settings: SGPIO (Default) and I²C		
Jumper	**SGPIO (Default) Setting**	**I²C Setting**
JP84	Pin 1-2: SGPIO mode enable	Pin 2-3: I²C mode enable

SAS Port Connections in I²C and SGPIO Settings

Use the following chart when connecting this backplane. If the SAS ports are connected out of order, it is not easy to identify drives using the LED function.

SAS Port Connections in I²C and SGPIO Settings		
Port #	**I²C**	**SGPIO**
# 0 - 3	I²C #1	Sideband #1
# 4 - 7	I²C #2	Sideband #2
# 8 - 11	I²C #3	Sideband #3

Front LED Indicators

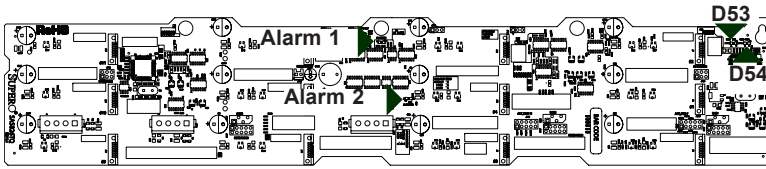

Figure C-4: Front LEDs

Front Panel LEDs		
LED	**State**	**Specification**
Alarm #1 (D3)	On	Overheat/drive failure in Channel 1.
Alarm #2 (D36)	On	Overheat/drive failure in Channel 2.
D53	On	Indicates +5V power. Light is on during normal operation.
D54	On	Indicates +12V power. Light is on during normal operation.

C-8 Rear Connectors and LED Indicators

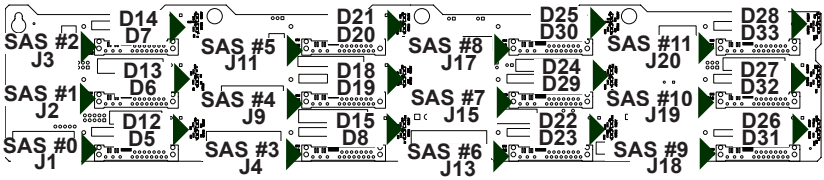

Figure C-5: Rear Connectors and LEDs

Rear SAS/SATA Connectors			
Rear Connector	**SAS Drive Number**	**Rear Connector**	**SAS Drive Number**
SAS #0	SAS/SATA HHD #0	SAS #6	SAS/SATA HHD #6
SAS #1	SAS/SATA HHD #1	SAS #7	SAS/SATA HHD #7
SAS #2	SAS/SATA HHD #2	SAS #8	SAS/SATA HHD #8
SAS #3	SAS/SATA HHD #3	SAS #9	SAS/SATA HHD #9
SAS #4	SAS/SATA HHD #4	SAS #10	SAS/SATA HHD #10
SAS #5	SAS/SATA HHD #5	SAS #11	SAS/SATA HHD #11

Rear LED Indicators		
Rear LED	**Hard Drive Activity**	**Failure LED**
SAS #0	D12	D5
SAS #1	D13	D6
SAS #2	D14	D7
SAS #3	D15	D8
SAS #4	D18	D19
SAS #5	D21	D20
SAS #6	D22	D23
SAS #7	D24	D29
SAS #8	D25	D30
SAS #9	D26	D31
SAS #10	D27	D32
SAS #11	D28	D33

Notes

Appendix D

BPN-SAS-826A Backplane Specifications

To avoid personal injury and property damage, carefully follow all the safety steps listed below when accessing your system or handling the components.

D-1 ESD Safety Guidelines

Electrostatic Discharge (ESD) can damage electronic components. To prevent damage to your system, it is important to handle it very carefully The following measures are generally sufficient to protect your equipment from ESD.

- Use a grounded wrist strap designed to prevent static discharge.
- Touch a grounded metal object before removing a component from the antistatic bag.
- Handle the backplane by its edges only; do not touch its components, peripheral chips, memory modules or gold contacts.
- When handling chips or modules, avoid touching their pins.
- Put the card and peripherals back into their antistatic bags when not in use.

D-2 General Safety Guidelines

- Always disconnect power cables before installing or removing any components from the computer, including the BPN-SAS-826A backplane.
- Disconnect the power cord before installing or removing any cables from the BPN-SAS-826A backplane.
- Make sure that the BPN-SAS-826A backplane is securely and properly installed on the motherboard to prevent damage to the system due to power shortage.

D-3 An Important Note to Users

All images and layouts shown in this user's guide are based upon the latest PCB Revision available at the time of publishing. The card you have received may or may not look exactly the same as the graphics shown in this manual.

D-4 Introduction to the BPN-SAS-826A Backplane

The BPN-SAS-826A backplane has been designed to utilize the most up-to-date technology available, providing your system with reliable, high-quality performance.

This manual reflects BPN-SAS-826A Revision 1.00, the most current release available at the time of publication. Always refer to the Supermicro Web site at www.supermicro.com for the latest updates, compatible parts and supported configurations.

D-5 Front Connectors

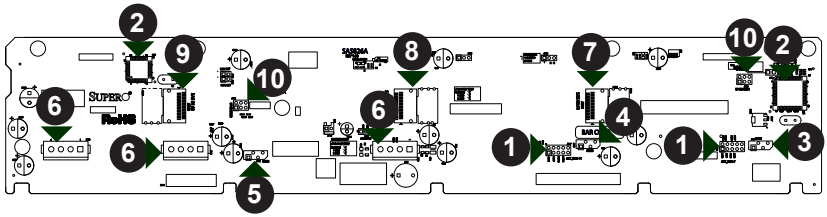

Figure D-1: Front Connectors

Front Connectors

1. ACT_IN: JP26 and JP47
2. Chips: MG9071 and MG9072
3. I²C Connector #1: JP37
4. I²C Connector #2: JP95
5. I²C Connector #3: JP52
6. Power Connectors (4-pin): JP10, JP13, and JP46
7. SAS IN #1 JSM1
8. SAS IN #2 JSM2
9. SAS IN #3 JSM3
10. Upgrade Connectors, JP69 and JP78

D-6 Front Connector and Pin Definitions

1. Activity LED Headers

The activity LED headers, designated JP26 and JP47, are used to indicate the activity status of each SAS drive. The activity LED headers are located on the front panel. For the activity lead headers to work properly, connect to them using a 10-pin LED cable. This is only used when the activity LED is not supported by the hard drive.

SAS Activity LED Header Pin Definitions

Pin #	Definition	Pin #	Definition
1	ACT IN#0	6	ACT IN#4
2	ACT IN#1	7	ACT IN#5
3	ACT IN#2	8	ACT IN#6
4	ACT IN#3	9	ACT IN#7
5	Ground	10	Empty

SAS Activity LED Header Pin Definitions

Pin #	Definition	Pin #	Definition
1	ACT IN#8	6	ACT IN#12
2	ACT IN#9	7	ACT IN#13
3	ACT IN#10	8	ACT IN#14
4	ACT IN#11	9	ACT IN#15
5	Ground	10	Empty

2. MG9071 and MG9072 Chips

The MG9071 and MG9072 are enclosure management chips that support the SES-2 controller and SES-2 protocols.

3., 4., 5. I²C Connectors

The I²C Connectors, designated JP37, JP52, and JP95, are used to monitor HDD activity and status. See the table on the right for pin definitions.

I²C Connector Pin Definitions

Pin#	Definition
1	Data
2	Ground
3	Clock
4	No Connection

6. Backplane Main Power Connectors

The 4-pin connectors, designated JP10, JP13, and JP46 provide power to the backplane. See the table on the right for pin definitions.

Backplane Main Power 4-Pin Connector

Pin#	Definition
1	+12V
2 and 3	Ground
4	+5V

7., 8., 9. SAS Ports

The SAS ports are used to connect the SAS drive cables. The three connectors are designated SAS IN #1 - SAS IN #3. Each of the three connectors has four ports for a total of twelve ports. These twelve ports are designated #0 - #11 and they are also compatible with SATA drives.

10. Upgrade Connectors

The upgrade connectors, designated JP69 and JP78, are used for manufacturer's diagnostic purposes only.

D-7 Front Jumper Locations and Settings

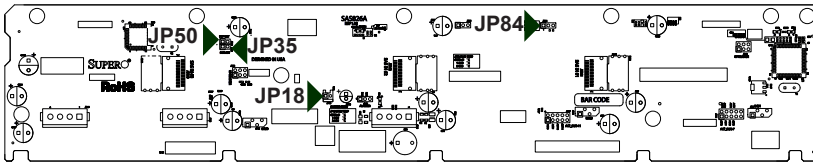

Figure D-2: Front Jumpers

Explanation of Jumpers

To modify the operation of the backplane, jumpers can be used to choose between optional settings. Jumpers create shorts between two pins to change the function of the connector. Pin 1 is identified with a square solder pad on the printed circuit board. **Note:** On two pin jumpers, "Closed" means the jumper is on and "Open" means the jumper is off the pins.

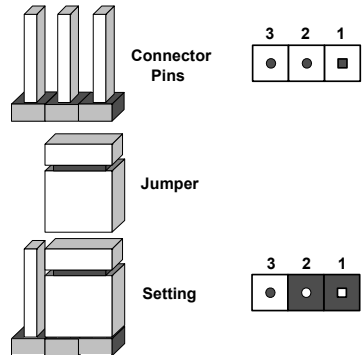

Jumper Settings		
Jumper	**Jumper Settings**	**Note**
JP35	Open: Default Closed: Reset	MG9072 Chip Reset #1
JP50	Open: Default Closed: Reset	MG9071 Chip Reset #2
JP18	Open: Default Closed: Reset	Buzzer Reset*

*The buzzer sound indicates than an overheat condition, a fan failure or a drive failure has occurred.

I²C and SGPIO Modes and Jumper Settings

This backplane can utilize I²C or SGPIO. SGPIO is the default mode and can be used without making changes to your jumpers. The following information details which jumper must be configured to use SGPIO mode or restore your backplane to I²C mode.

Jumper Settings: SGPIO (Default) and I²C		
Jumper	**SGPIO (Default) Setting**	**I²C Setting**
JP84	Pins 1-2: SGPIO mode enable	Pins 2-3: I²C mode enable

Front LED Indicators

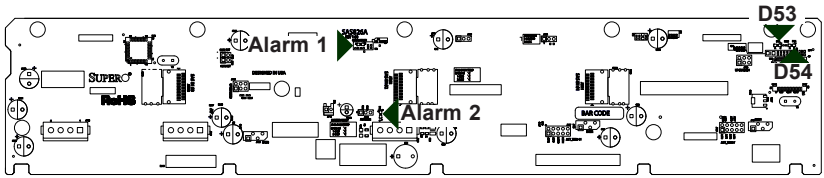

Figure D-3: Front LEDs

Front Panel LEDs		
LED	**State**	**Specification**
Alarm #1 (D3)	On	Overheat/drive failure in Channel 1 will activate the buzzer.
Alarm #2 (D36)	On	Overheat/drive failure in Channel 2 will activate the buzzer.
D53	On	Indicates +5V power. Light is on during normal operation.
D54	On	Indicates +12V power. Light is on during normal operation.

D-8 Rear Connectors and LED Indicators

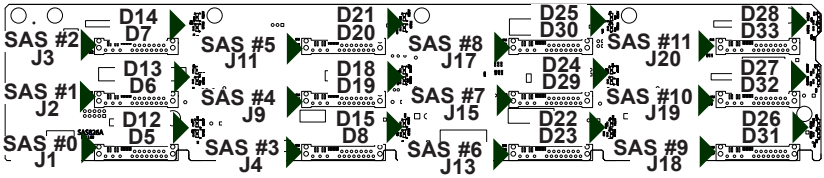

Figure D-4: Rear Connectors and LEDs

Rear SAS/SATA Connectors			
Rear Connector	**SAS Drive Number**	**Rear Connector**	**SAS Drive Number**
SAS #0	SAS/SATA HHD #0	SAS #6	SAS/SATA HHD #6
SAS #1	SAS/SATA HHD #1	SAS #7	SAS/SATA HHD #7
SAS #2	SAS/SATA HHD #2	SAS #8	SAS/SATA HHD #8
SAS #3	SAS/SATA HHD #3	SAS #9	SAS/SATA HHD #9
SAS #4	SAS/SATA HHD #4	SAS #10	SAS/SATA HHD #10
SAS #5	SAS/SATA HHD #5	SAS #11	SAS/SATA HHD #11

Rear LED Indicators		
Rear LED	**Hard Drive Activity**	**Failure LED**
SAS #0	D12	D5
SAS #1	D13	D6
SAS #2	D14	D7
SAS #3	D15	D8
SAS #4	D18	D19
SAS #5	D21	D20
SAS #6	D22	D23
SAS #7	D24	D29
SAS #8	D25	D30
SAS #9	D26	D31
SAS #10	D27	D32
SAS #11	D28	D33

Notes

Appendix E

BPN-SAS2-826EL Backplane Specifications

To avoid personal injury and property damage, carefully follow all the safety steps listed below when accessing your system or handling the components.

E-1 ESD Safety Guidelines

Electrostatic Discharge (ESD) can damage electronic components. To prevent damage to your system, it is important to handle it very carefully. The following measures are generally sufficient to protect your equipment from ESD.

- Use a grounded wrist strap designed to prevent static discharge.
- Touch a grounded metal object before removing a component from the antistatic bag.
- Handle the backplane by its edges only; do not touch its components, peripheral chips, memory modules or gold contacts.
- When handling chips or modules, avoid touching their pins.
- Put the card and peripherals back into their antistatic bags when not in use.

E-2 General Safety Guidelines

- Always disconnect power cables before installing or removing any components from the computer, including the backplane.
- Make sure that the backplane is properly and securely on the motherboard to prevent damage to the system due to power outages.

E-3 An Important Note to Users

All images and layouts shown in this user's guide are based upon the latest backplane revision available at the time of publishing. The card you have received may or may not look exactly the same as the graphics shown in this manual.

E-4 Introduction to the BPN-SAS2-826EL Backplane

The BPN-SAS3-826EL backplane has been designed to utilize the most up-to-date technology available, providing your system with reliable, high-quality performance.

This manual reflects BPN-SAS2-826EL Revision 1.00, the most current release available at the time of publication. Always refer to the Supermicro Web site at www.supermicro.com for the latest updates, compatible parts and supported configurations.

E-5 Overview of the BPN-SAS2-826EL1/EL2 Backplanes

The BPN-SAS2-826EL1 and BPN-SAS2-826EL2 model backplanes are identical, except that the BPN-SAS2-826EL2 backplane has duplicate secondary components which are not found on the BPN-SAS2-826EL1. The BPN-SAS2-826EL2 is divided into a two sections, with the primary components on the right side of the board and the secondary components on the left. SAS2 backplanes are not compatible with legacy SAS (3 Gbps) or SATA (1.5 Gbps) backplanes or lower. <CHECK?>

E-6 Front Connectors

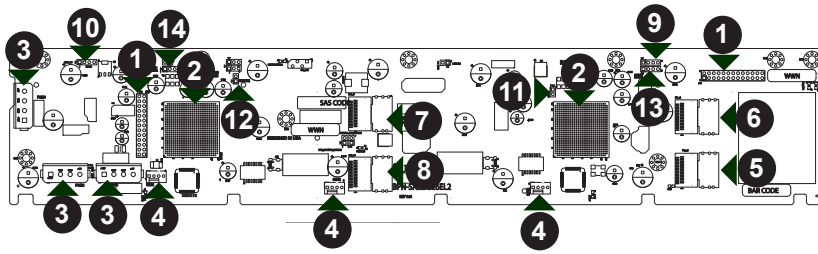

Figure E-1. BPN-SAS2-826EL1/EL2 Connectors and Components

Front Connectors

1. EPP connectors: J16 and J17.
2. Primary and secondary expander chips
3. Power connectors: PWR1, PWR2, and PWR3.
4. Fan connectors: Fan1, Fan2, and Fan3.
5. Primary SAS connector: PRI_J0.
6. Primary SAS connector: PRI_J1.
7. Secondary SAS connector: SEC_ J1 (not available in EL1 single port backplane).
8. Secondary SAS connector: SEC_ J0 (not available in EL1 single port backplane).
9. Primary UART connector: UART_ P1, for manufacturer's use only.
10. Secondary UART connector: UART_S1 for manufacturer's use only (Not present on BPN-SAS2-826EL1).
11. Primary MDIO connector: MDIO1 for manufacturer's use only.
12. Secondary MDIO connector: MDIO2 for manufacturer's use only (Not present on BPN-SAS2-826EL1).
13. Primary debug connector: EX-PDGB1 for manufacturer's use only.
14. Primary debug connector: EX-PDGB2 for manufacturer's use only (Not present on BPN-SAS2-826EL1)

E-7 Front Connector and Settings

1. EPP Ports

The EPP ports are used for manufacturer diagnostic purposes only.

2. Primary and Secondary Expander Chips

This primary and secondary expander chips allow the backplane to support dual port, cascading, and failover configurations.

3. Backplane Main Power Connectors

The 4-pin connectors, designated PWR1, PWR2, and PWR3, provide power to the backplane. See the table on the right for pin definitions.

Backplane Main Power 4-Pin Connector	
Pin#	Definition
1	+12V
2 and 3	Ground
4	+5V

4. Fan Connectors

The 3-pin connectors, designated Fan1, Fan2, and Fan3, provide power to the fans. See the table on the right for pin definitions.

Fan Connectors	
Pin#	Definition
1	Ground
2	+12V
3	Tachometer

5. - 8. SAS Ports

Primary and secondary SAS ports.

9. - 10. UART Connectors

Primary and secondary UART connectors: For manufacturer's use only. Secondary connector is not present on BPN-SAS2-826EL1.

11. - 12. MDIO Connectors

Primary and secondary MDIO connectors. For manufacturer's use only. Secondary connector is not present on BPN-SAS2-826EL1.

13. - 14. Debug Connectors

Primary and secondary debug connectors. For manufacturer's use only. Secondary connector is not present on BPN-SAS2-826EL1.

E-8 Front Jumper Locations and Settings

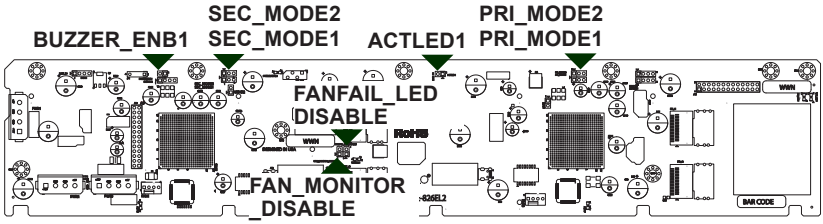

Figure E-2. Front Jumpers

Explanation of Jumpers

To modify the operation of the backplane, jumpers can be used to choose between optional settings. Jumpers create shorts between two pins to change the function of the connector. Pin 1 is identified with a square solder pad on the printed circuit board. Note: On two pin jumpers, "Closed" means the jumper is on and "Open" means the jumper is off the pins.

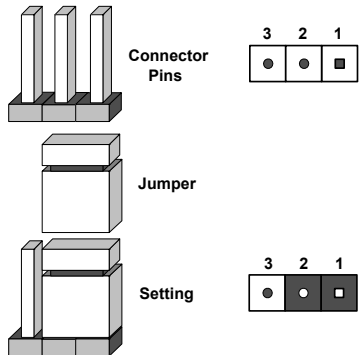

General Jumper Settings		
Jumper	**Jumper Settings**	**Note**
PRI_MODE1	Pins 2-3	Factory setting do not change.
PRI_MODE2	Pins 2-3	Factory setting do not change.
SEC_MODE1	Pins 2-3	Factory setting do not change.
SEC_MODE2	Pins 2-3	Factory setting do not change.
FAN_MONITOR_DISABLE	Open: Enabled (Default) Closed: Disabled	Enables the fan speed monitor reporting.
FANFAIL_LED_DISABLE	Open: Enabled (Default) Closed: Disabled	Enables the FANFAIL1 LED.
BUZZER_ENB1	Open: Disabled Closed: Enabled	Buzzer disabled* Buzzer enabled*

*The buzzer sound indicates that a condition requiring immediate attention has occurred.

The buzzer alarm is triggered by one of the following conditions:

1. Hard drive failure
2. Fan failure
3. System temperature over 45º Celsius.

E-9 Front LED Indicators

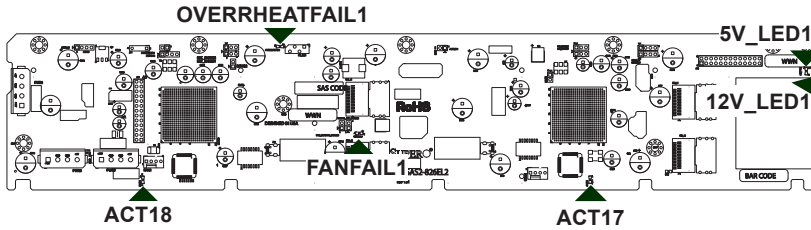

Figure E-3. Front LEDs

Backplane LEDs		
LED	**State**	**Specification**
OVERHEATFAIL1	On	Overheat or drive failure.
FANFAIL1	On	System fan failure.
ACT17	On	Primary Ethernet Tx activity LED.
ACT18	On	Secondary Ethernet Tx activity LED.
5V_LED1	Off	Backplane power failure. Light is on during normal operation.
12V_LED1	Off	Backplane power failure. Light is on during normal operation.

E-10 Rear Connectors and LED Indicators

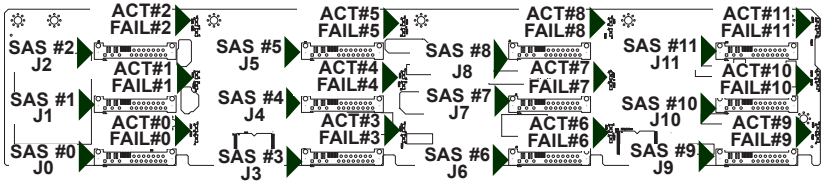

Figure E-4. Rear Connectors and LEDs

Rear SAS Connectors			
Rear Connector	**SAS Drive Number**	**Rear Connector**	**SAS Drive Number**
SAS #0	SAS HDD #0	SAS #6	SAS HDD #6
SAS #1	SAS HDD #1	SAS #7	SAS HDD #7
SAS #2	SAS HDD #2	SAS #8	SAS HDD #8
SAS #3	SAS HDD #3	SAS #9	SAS HDD #9
SAS #4	SAS HDD #4	SAS #10	SAS HDD #10
SAS #5	SAS HDD #5	SAS #11	SAS HDD #11

Rear LED Indicators		
Rear LED	**Hard Drive Activity**	**Failure LED**
SAS #0	ACT #0	FAIL #0
SAS #1	ACT #1	FAIL #1
SAS #2	ACT #2	FAIL #2
SAS #3	ACT #3	FAIL #3
SAS #4	ACT #4	FAIL #4
SAS #5	ACT #5	FAIL #5
SAS #6	ACT #6	FAIL #6
SAS #7	ACT #7	FAIL #7
SAS #8	ACT #8	FAIL #8
SAS #9	ACT #9	FAIL #9
SAS #10	ACT #10	FAIL #10
SAS #11	ACT #11	FAIL #11

E-11 Single and Dual Port Expanders

Single Ports

BPN-SAS2-826EL1 backplanes have a single-port expander that accesses all drives and supports cascading.

Dual Ports

BPN-SAS2-826EL2 backplanes have dual-port expanders that access all drives. These dual-port expanders support cascading, failover, and recovery.

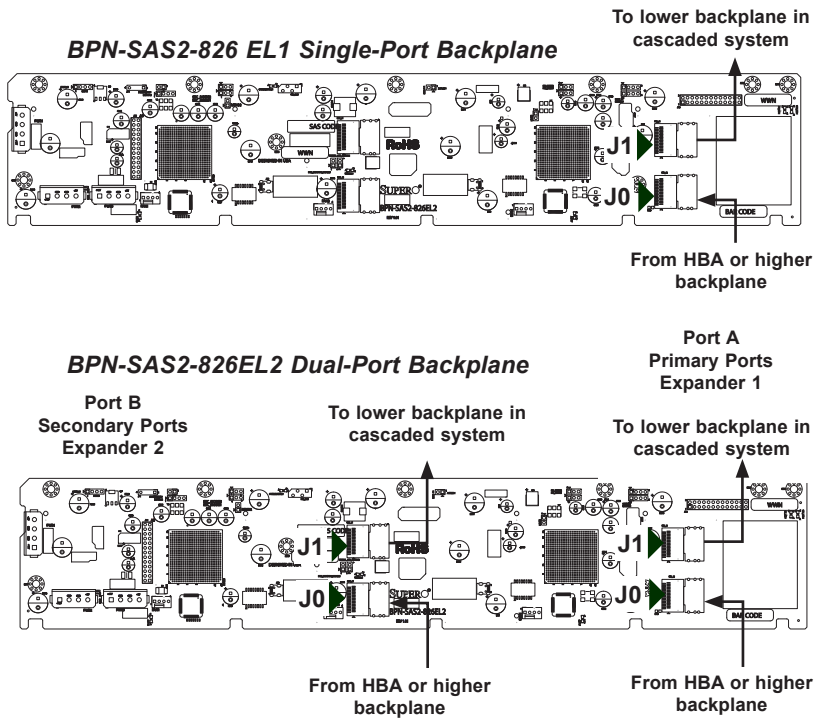

Figure E-5. Single and Dual Port Expanders

E-12 Failover

The BPN-SAS2-826EL2 backplane has two expanders which allow effective failover and recovery.

Single Host Bus Adapter

In a single host bus configuration, the backplane connects to one host bus adapter.

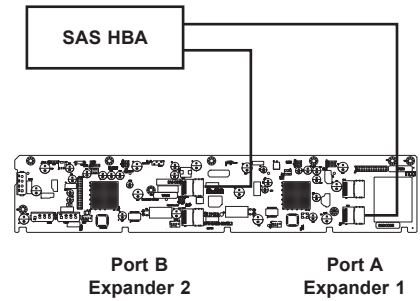

Single Host Bus Adapter Failover

If the expander or data path in Port A fails, the system will automatically fail over to Port B.

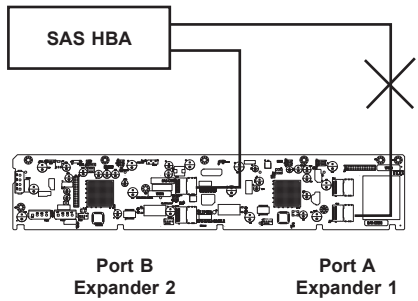

Figure E-6. Single HBA Failover

E-13 Failover with RAID Cards and Multiple HBAs

The BPN-SAS2-826EL backplane may be configured for failover with multiple HBAs using either RAID controllers or HBAs to acheive failover protection.

RAID Controllers: If RAID controllers are used, then the failover is accomplished through port failover on the same RAID card.

HBAs: If multiple HBAs are used to achieve failover protection and load balancing, **Linux MPIO software must be installed and correctly configured to perform the load balancing and failover tasks.**

Dual Host Bus Adapter

In a dual host bus configuration, the backplane connects to two host bus adapters.

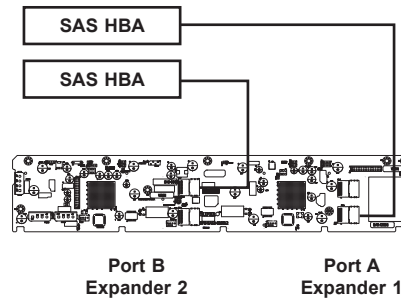

Dual Host Bus Adapter Failover

If the expander or data path in Port A fails, the system will automatically fail over to Port B. This maintains a full connection to all drives.

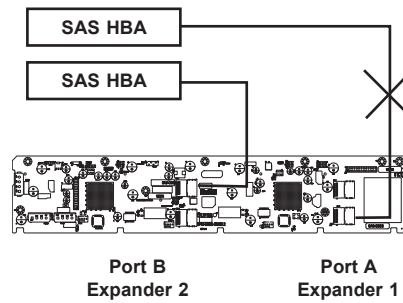

Figure E-7. Failover with RAID Cards and Multiple HBAs

IMPORTANT: For RAID controllers, redundancy is achieved through port failover. For multiple HBAs MPIO software is required to achieve failover protection.

E-14 Cables and Chassis Power Card

Chassis Power Card

In a cascaded configuration, the first chassis includes a motherboard and at least one host bus adapter. Other servers in this enclosed system must include a power card. This section describes the supported power card for the BPN-SAS2-826EL backplane system.

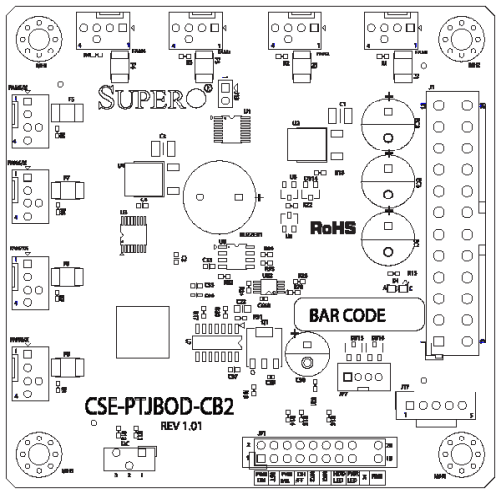

Figure E-8. The CSE-PTJBOD-CB2 Power Card

Power Card		
Part Number	**Part Type**	**Where Used**
CSE-PTJBOD-CB2	Power Card	Allows the chassis to be used as a JBOD (Just a Bunch of Drives) system.

Connecting an Internal Host Bus Adapter to the Backplane

The following section lists the most common cables used to connect the HBA to the backplane.

Single Internal Host Bus Adapter

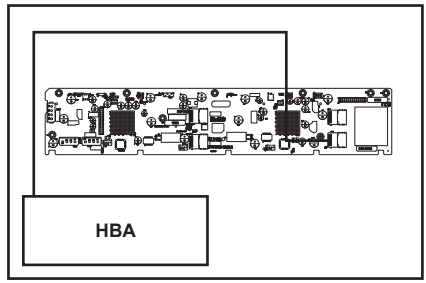

Dual Internal Host Bus Adapter

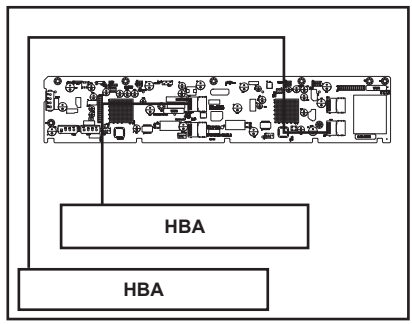

Figure E-9. Connecting to Single and Dual Internal HBAs

IMPORTANT: See Section E-13 of this manual, *Failover with RAID Cards and Multiple HBAs* for important information on supported configurations.

Supported Internal HBA to Backplane Cables

Use the following listed cables to create connections between the internal HBA and backplane. The cables required depend on the HBA connector.

Cable Name: iPass to 4-Lane

Part #: CBL-0117 **Length:** 46 cm (18 inches)

Description: This cable has one SFF-8484 (32-pin) connector on one end and one iPass (SFF-8087/Mini-SAS) connector (36-pin) at the other. This cable connects from the HBA to the SAS2-826EL backplane.

Cable Name: SFF-8087 (Mini-SAS) TO SFF-8087 (Mini-SAS)

Part #: CBL-0108L-02 **Length:** 39 cm (15 inches)

Part #: CBL-0109L-02 **Length:** 22 cm (9 inches)

Part #: CBL-0110L-02 **Length:** 18 cm (7 inches)

Description: This cable has an iPass (SFF-8087/Mini-SAS) connector (36-pin) at each end. It connects from the HBA to the BPN-SAS2-826EL backplane.

Connecting an External Host Bus Adapter to the Backplane

This backplane supports external HBAs. In this configuration, the HBA and the backplane are in different physical chassis. This allows a JBOD (Just a Bunch Of Drives) configuration in an existing system.

Single External Host Bus Adapter

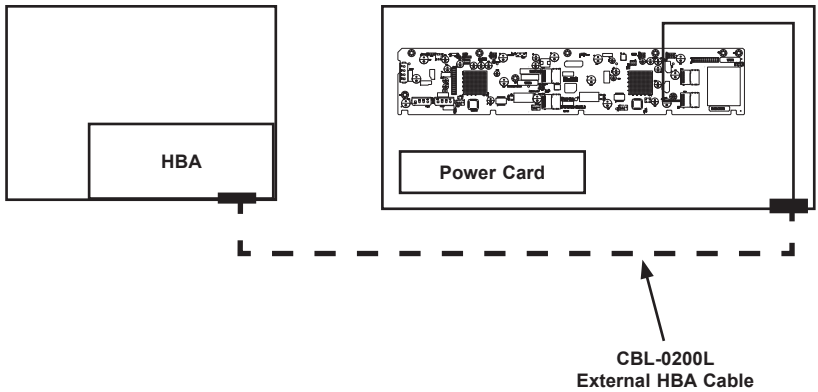

Dual External Host Bus Adapter

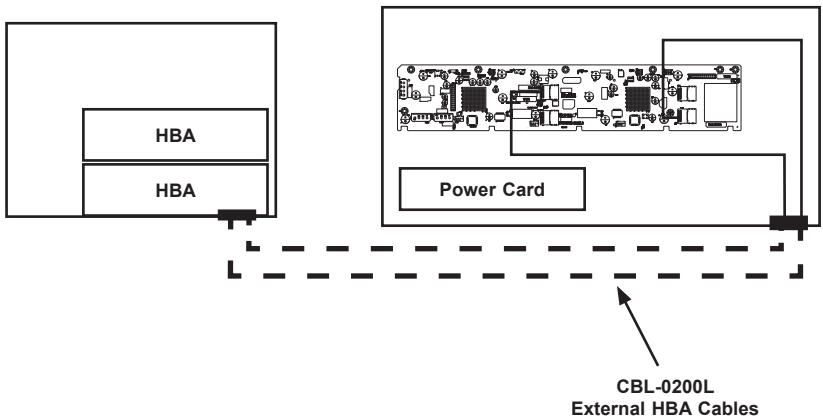

Figure E-110. Connecting Single and Dual External HBAs

IMPORTANT: See Section E-13 of this manual, *Failover with RAID Cards and Multiple HBAs* for important information on supported configurations.

Supported External HBA to Backplane Cable

Use the following cable if your external HBA has an InfiniBand connector.



Figure E-11. The CBL-0200L Cable

Cable Name: SAS InfiniBand to Mini-SAS X4 1M cable, PBF

Part #: CBL-0200L **Length:** 1 meter

Description: This cable has an InfiniBand connector (SFF-8470) on one end and an SFF-8088-1X (26-pin) connector at the other end.

Connecting Multiple Backplanes in a Single Channel Environment

This section describes the cables used when cascading from a single HBA. These connections use CBL-0167L internal cables and CBL-0166L external cables.

Single HBA Configuration

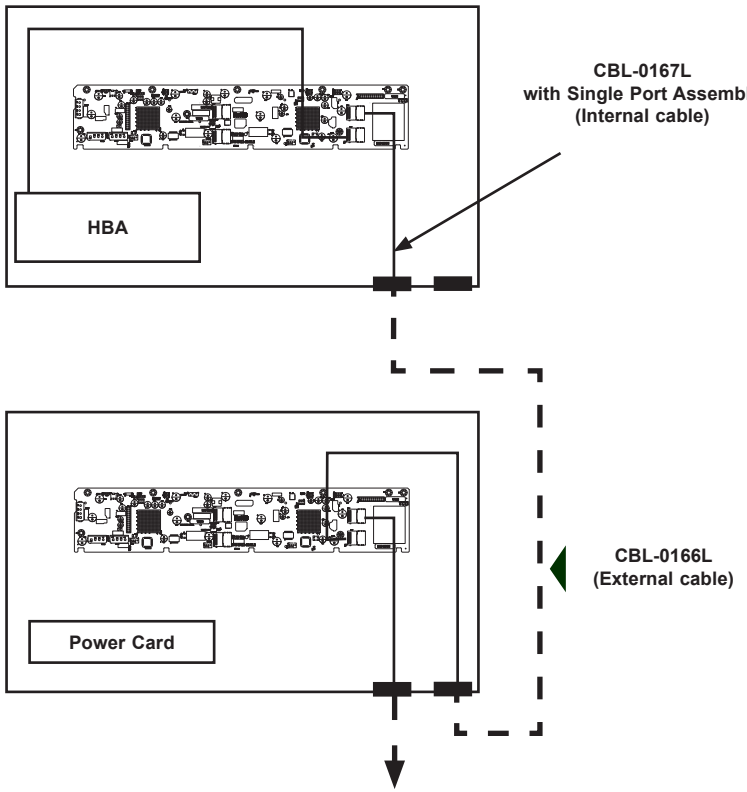

Figure E-12. Single HBA Configuration

Single HBA Configuration Cables

Single Port Cable Assembly

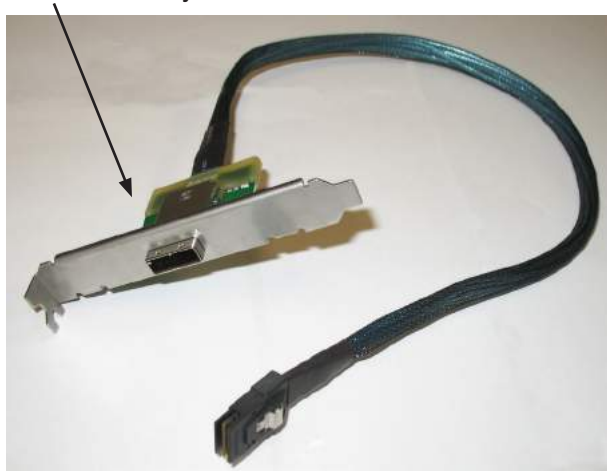

Figure E-13. The CBL-0167L Cable

Cable Name: BPN-SAS EL2/EL1 Backplane Cable (Internal) w/ 2-port Cascading Cable, 68 cm

Part #: CBL-0167L (SFF-8087 to SFF-8088 x1)
Ports: Single
Placement: Internal cable

Description: Internal cable. Connects the backplane to the host bus adapter or external port. Used in single port environments.



Figure E-14. The CBL-0166L Cable

Cable Name: BPN-SAS EL2/EL1 Cascading Cable (External), 68 cm

Part #: CBL-0166L (SFF-8088 1x to SFF-8088 x1)
Ports: Single or Dual
Placement: External cable

Description: External cascading cable. Connects ports between servers. With most connectors, use one cable for single port connections and two cables for dual port connections.

Connecting Multiple Backplanes in a Dual Channel Environment

This section describes the cables used when cascading from a single HBA. These connections use CBL-0168L internal cables and CBL-0166L external cables.

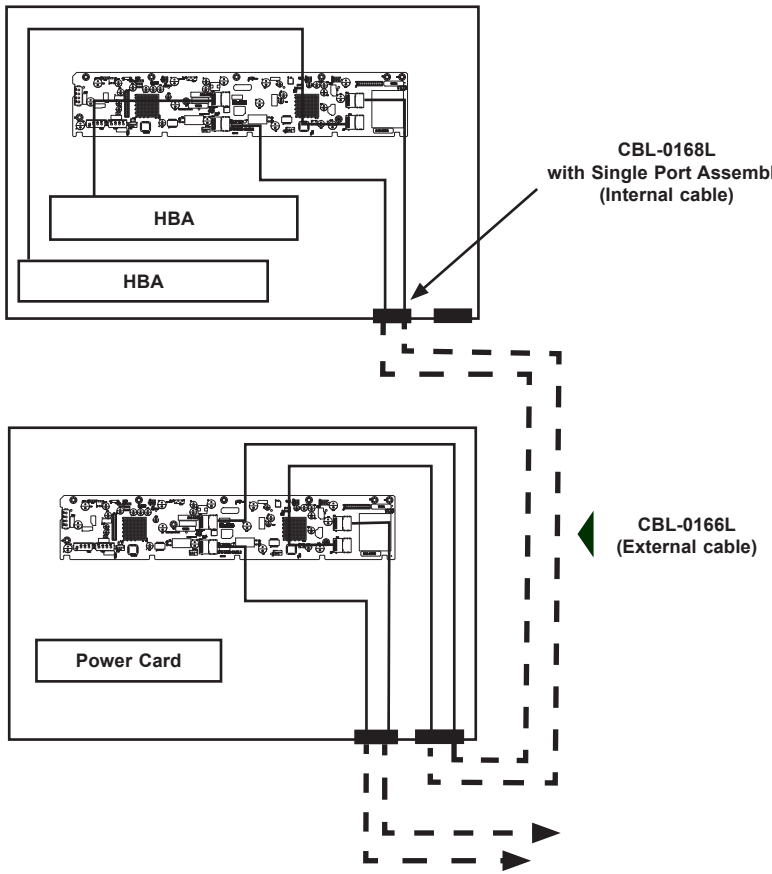

Figure E-15. Connecting Multiple Backplanes when using Dual Channels

IMPORTANT: See Section E-13 of this manual, *Failover with RAID Cards and Multiple HBAs* for important information on supported configurations.

Dual HBA Configuration Cables



Figure E-16. The CBL-0168L Cable

Cable Name: SAS Dual-port Cable Assembly, 68/76 cm

Part #: CBL-0168L (SFF-8087 to SFF-8088 x2
Ports: Dual
Placement: Internal cable

Description: Internal cascading cable. Connects the backplane to the host bus adapter or external port. Used in dual-port environments.



Figure E-17. The CBL-0166L Cable

Cable Name: BPN-SAS EL2/EL1 Cascading Cable (External), 68 cm

Part #: CBL-0166L (SFF-8088 x1 to SFF-8088 x1)
Ports: Single or dual
Placement: External cable

Description: External cascading cable. Connects ports between servers. Use one cable for single port connections and two cables for dual port connections.

E-15 Supported Cascading Configuration

Cascading allows the system to access data at a faster rate by allowing several backplanes to share resources to reduce latency time.

The first backplane in a cascaded system requires a motherboard and HBA. Other servers require a power control card, not a motherboard and HBA.

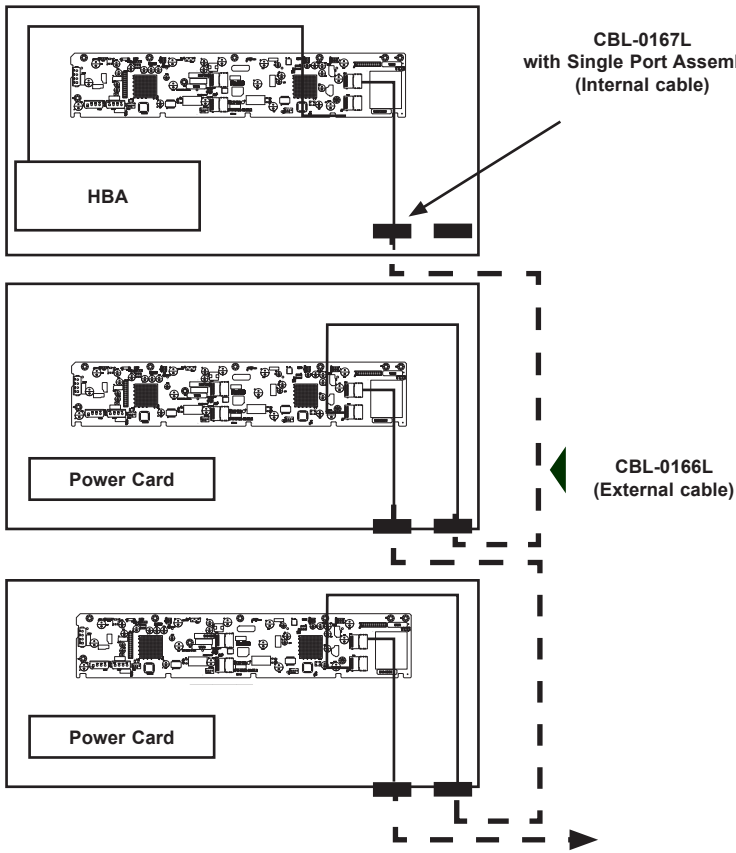

Figure E-18. Supported Cascading Configuration

Other Considerations:

- Cascading supports up to one hundred twenty-two hard drives
- Use the same cables for all single-port configurations
- See page E-15 if your HBA is external to your backplane.

Server System with Dual SAS HBA and Cascading Configuration

IMPORTANT: See Section E-13 of this manual, *Failover with RAID Cards and Multiple HBAs* for important information on supported configurations.

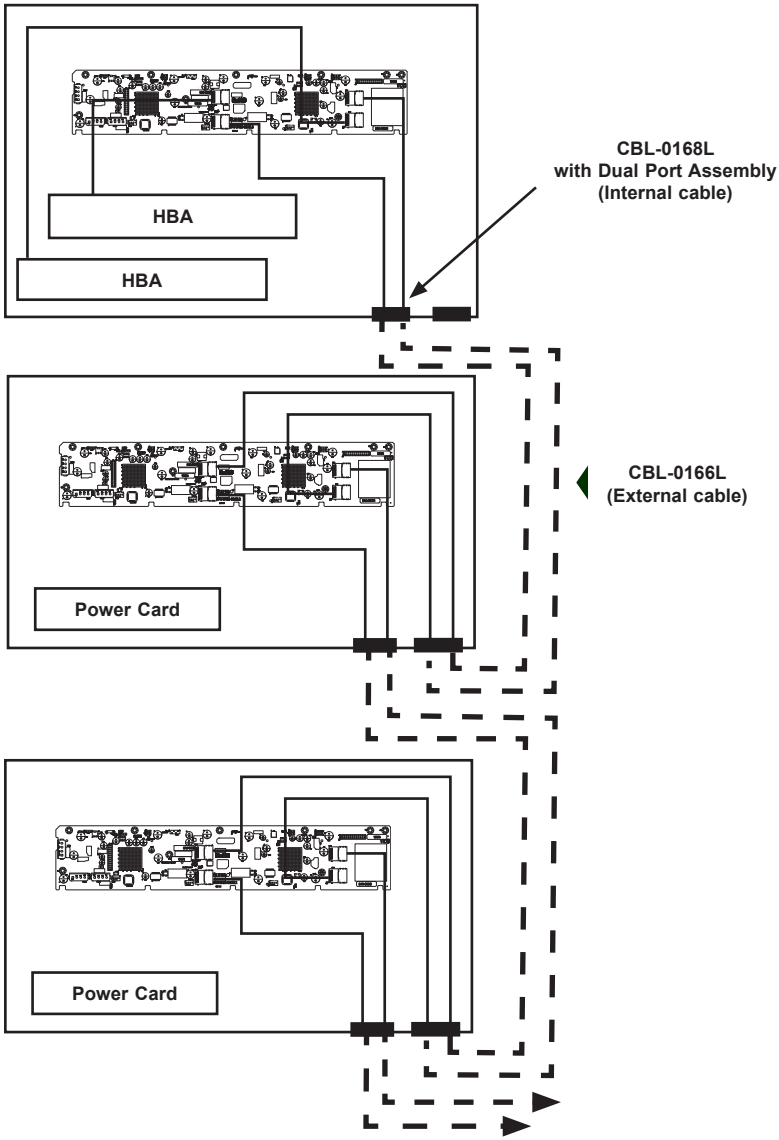

Figure E-19. Server System with Dual SAS HBA and Cascading Configuration

Appendix F

BPN-SAS3-826EL Backplane Specifications

To avoid personal injury and property damage, carefully follow all the safety steps listed below when accessing your system or handling the components.

F-1 ESD Safety Guidelines

Electrostatic Discharge (ESD) can damage electronic components. To prevent damage to your system, it is important to handle it very carefully. The following measures are generally sufficient to protect your equipment from ESD.

- Use a grounded wrist strap designed to prevent static discharge.
- Touch a grounded metal object before removing a component from the antistatic bag.
- Handle the backplane by its edges only; do not touch its components, peripheral chips, memory modules or gold contacts.
- When handling chips or modules, avoid touching their pins.
- Put the card and peripherals back into their antistatic bags when not in use.

F-2 General Safety Guidelines

- Always disconnect power cables before installing or removing any components from the computer, including the BPN-SAS3-826EL series backplane.
- Make sure that the backplane is properly and securely on the motherboard to prevent damage to the system due to power outages.

F-3 An Important Note to Users

All images and layouts shown in this user's guide are based upon the latest backplane revision available at the time of publishing. The card you have received may or may not look exactly the same as the graphics shown in this manual.

F-4 Introduction to the BPN-SAS3-826EL Backplane

The BPN-SAS3-826EL backplane has been designed to utilize the most up-to-date technology available, providing your system with reliable, high-quality performance.

This manual reflects BPN-SAS3-826EL Revision 1.00, the most current release available at the time of publication. Always refer to the Supermicro Web site at www.supermicro.com for the latest updates, compatible parts and supported configurations.

F-5 Overview of the BPN-SAS3-826EL1/EL2 Backplanes

The BPN-SAS3-826EL1 and BPN-SAS3-826EL2 model backplanes are identical, except that the BPN-SAS3-826EL2 backplane has duplicate secondary components which are not found on the BPN-SAS3-826EL1. The BPN-SAS3-826EL2 is divided into a two sections, with the primary components on the right side of the board and the secondary components on the left. SAS3 backplanes are not compatible with legacy SAS (3 Gbps) or SATA (1.5 Gbps) backplanes or lower.

F-5 Front Connectors

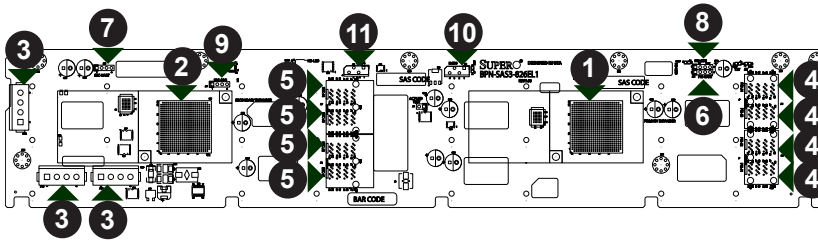

Figure F-1: BPN-SAS3-826EL1/EL2 Connectors and Components

1. Primary expander chip.
2. Secondary expander chip (not present on EL1 single port backplanes).
3. Power connectors: JPW1, JPW2, and JPW3.
4. Primary SAS ports: PRI-J1 through PRI-J4.
5. Secondary SAS ports: SEC-J1 through SEC-J4 (not present on EL1 single port backplanes).
6. Primary UART connector: PRI-UART (J22) for manufacturer's use only.
7. Secondary UART connector: SEC-UART(J23) for manufacturer's use only, not present on EL1 backplanes.
8. Primary SDB connector: PRI-SDB (J18), for manufacturer's use only.
9. Secondary SDB connector: PRI-SDB (J19), for manufacturer's use only, not present on EL1 backplanes.
10. Primary I^2C connector. I2C#0 (J20).
11. Secondary I^2C connector, I2C#4 (J21).

F-6 Front Connector and Pin Definitions

1. - 2. Primary and Secondary Expander Chips

The primary and secondary expander chips allow the backplane to support dual port, cascading, and failover configurations.

3. Backplane Main Power Connectors

The 4-pin connectors, designated JPW1, JPW2, and JPW3, provide power to the backplane. See the table on the right for pin definitions.

Backplane Main Power 4-Pin Connector	
Pin#	Definition
1	+12V
2 and 3	Ground
4	+5V

4. - 5. Primary and Secondary SAS Connectors

The primary SAS connectors are designated PRI-J1 through PRI-J4. The secondary SAS Ports are designated SEC-J1 through SEC-J4 and are not present on EL1 single port backplanes.

6. - 7. Primary and Secondary UART Connectors

The primary UART connector is designated PRI-UART and J22. The secondary UART connector is designated SEC-UART and J23 and is not present on BPN-SAS3-826EL1. UART connectors are used for manufacturer's diagnostic purposes only.

8. - 9. SDB Connectors

The Primary SDB connector is designated PRI-SDB and J18. The secondary SDB connector is designated SEC-SDB and J19. (Not present on BPN-SAS3-826EL1 backplanes) These are debug connectors used for the manufacturer's diagnostic purposes only.

10. - 11. I²C Connectors

The primary I2C connector. is designated I2C#0 and J20. The secondary I2C connector is designated I2C#4 and J21.

F-7 Front Jumper Location and Settings

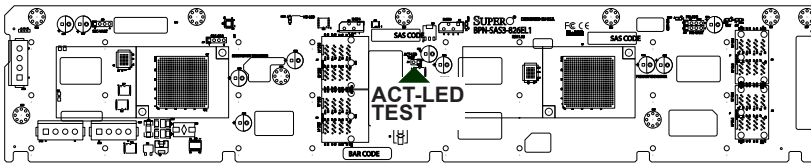

Figure F-2. Front Jumpers

Explanation of Jumpers

To modify the operation of the backplane, jumpers can be used to choose between optional settings. Jumpers create shorts between two pins to change the function of the connector. Pin 1 is identified with a square solder pad on the printed circuit board. Note: On two pin jumpers, "Closed" means the jumper is on and "Open" means the jumper is off the pins.

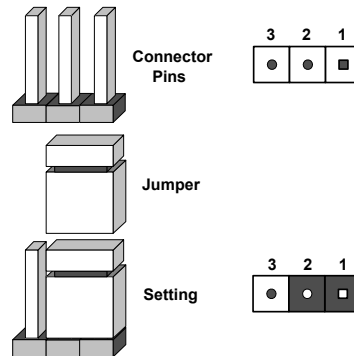

General Jumper Settings		
Jumper	**Jumper Settings**	**Note**
ACT-LED TEST	Open: Disabled (Default) Closed: Enabled	Activity LED test.

F-8 Front LED Indicators

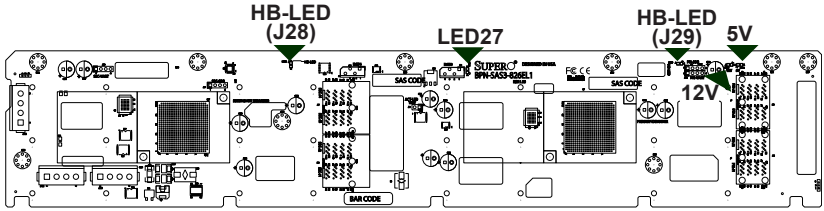

Figure F-3. Front LEDs

Backplane LEDs			
LED	**Normal State**	**Abnormal State**	**Specification**
HB-LED (J29)	Blinking	On/Off	Heartbeat LED, primary expander
HB-LED (J28)	Blinking	On/Off	Heartbeat LED, secondary expander
LED27	Off	On	System overheat LED
5V	On	Off	5V power status
12V	On	Off	12V power status

F-9 Rear Connectors and LED Indicators

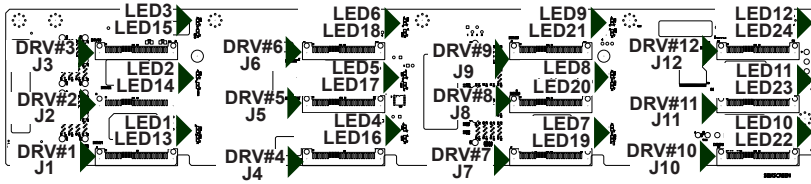

Figure F-4. Rear Connectors and LEDs

Rear SAS Connectors			
Rear Connector	**SAS Drive Number**	**Rear Connector**	**SAS Drive Number**
DRV#1	SAS HDD #1	DRV#7	SAS HDD #7
DRV#2	SAS HDD #2	DRV#8	SAS HDD #8
DRV#3	SAS HDD #3	DRV#9	SAS HDD #9
DRV#4	SAS HDD #4	DRV#10	SAS HDD #10
DRV#5	SAS HDD #5	DRV#11	SAS HDD #11
DRV#6	SAS HDD #6	DRV#12	SAS HDD #12

Rear LED Indicators		
Rear LED	**Hard Drive Activity**	**Failure LED**
SAS #1	LED1	LED13
SAS #2	LED2	LED14
SAS #3	LED3	LED15
SAS #4	LED4	LED16
SAS #5	LED5	LED17
SAS #6	LED6	LED18
SAS #7	LED7	LED19
SAS #8	LED8	LED20
SAS #9	LED9	LED21
SAS #10	LED10	LED22
SAS #11	LED11	LED23
SAS #12	LED12	LED24

Dual Port and Cascading Configurations

F-10 Single and Dual Port Expanders

SAS connectors PRI-J1 to J4 and SEC-J1 to J4 are bidirectional and can be treated as input or output.

Single Ports

BPN-SAS3-826EL1 backplanes have a single port expander that accesses all of the drives and supports cascading.

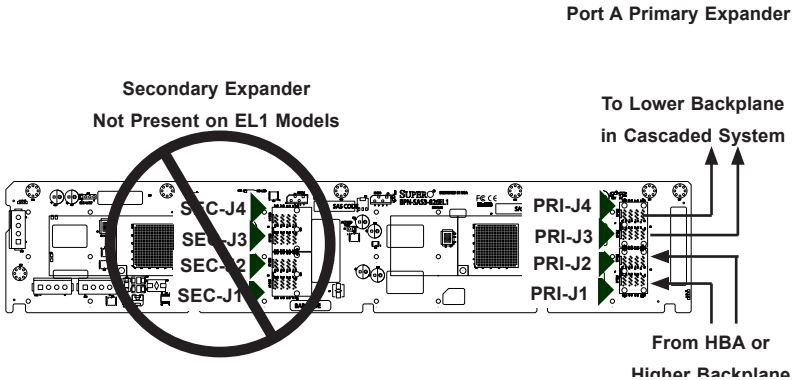

Figure F-5. BPN-SAS3-826EL1 Single Port Configuration

Dual Ports

BPN-SAS3-826EL2 model backplanes have dual-port expanders that access all of the hard drives. These dual-port expanders support cascading, failover, and recovery.

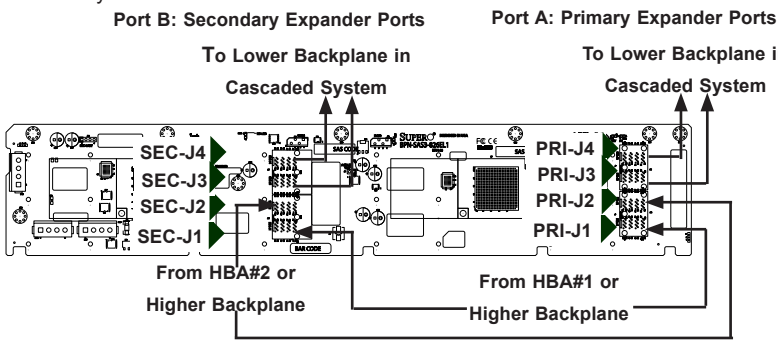

Figure F-6. BPN-SAS3-826EL2 Dual Port Configuration

F-11 Failover

The BPN-SAS3-826EL2 model backplane has two expanders which enable effective failover and recovery.

Single Host Bus Adapter

In a single host bus configuration, the backplane connects to one host bus adapter.

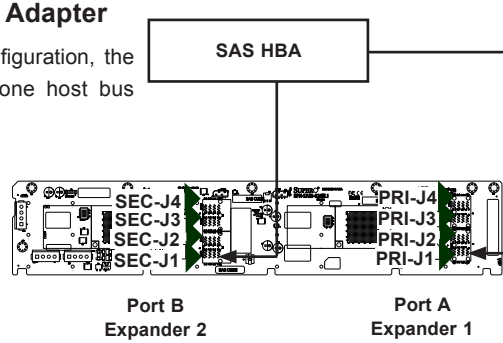

Figure F-7. Single HBA

Single Host Bus Adapter Failover

If the expander or data path in Port A fails, the system automatically switches to Port B with application software or failover support.

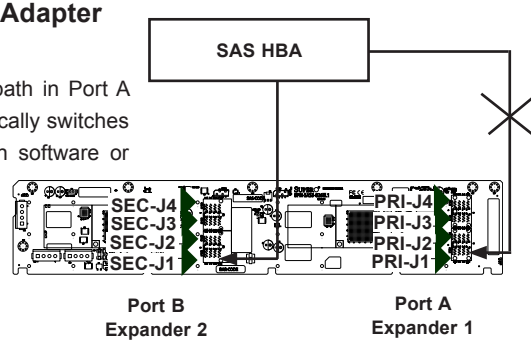

Figure F-8. Single HBA Failover

F-12 Failover with RAID Cards and Multiple HBAs

The BPN-SAS3-826EL backplane may be configured for failover with multiple HBAs using either RAID controllers or HBAs to acheive failover protection.

RAID Controllers: If RAID controllers are used, then the failover is accomplished through port failover on the same RAID card.

HBAs: If multiple HBAs are used to achieve failover protection and load balancing, **Linux MPIO software must be installed and correctly configured to perform the load balancing and failover tasks.**

Dual Host Bus Adapter

In a dual host bus configuration, the backplane connects to two HBA's.

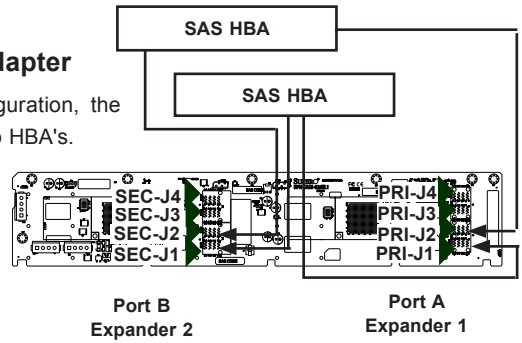

Figure F-9. Dual HBA

Dual Host Bus Adapter Failover

If the expander or data path in Port A fails, the system automatically switches to Port B. This maintains a full connection to all drives.

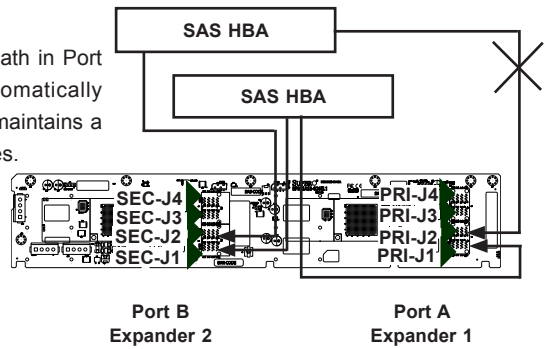

Figure F-10. Dual HBA Failover

IMPORTANT: For RAID controllers, redundancy is achieved through port failover. For multiple HBAs MPIO software is required to achieve failover protection.

F-13 Chassis Control Card and Support Cables

Chassis Control Card

In a cascaded configuration, the first chassis includes a motherboard and at least one host bus adapter (HBA). Other servers in this enclosed system must be equipped with a control card. This section describes the supported control card for the BPN-SAS3-826EL series backplane.

For more information, see the Supermicro web site at www.supermicro.com.

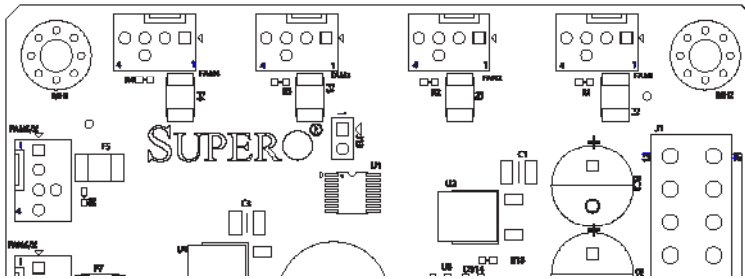

Figure F-11. Chassis Control Card (Sold Separately)

Power Card		
Part Number	**Part Type**	**Where Used**
CSE-PTJBOD-CB3	Control card	Allows the chassis to be used as a JBOD (Just a Bunch of Drives) system, which supports IPMI for remote on/off control.

Connecting an Internal HBA to the Backplane

The following section lists the most common cables used to connect the HBA to the backplane.

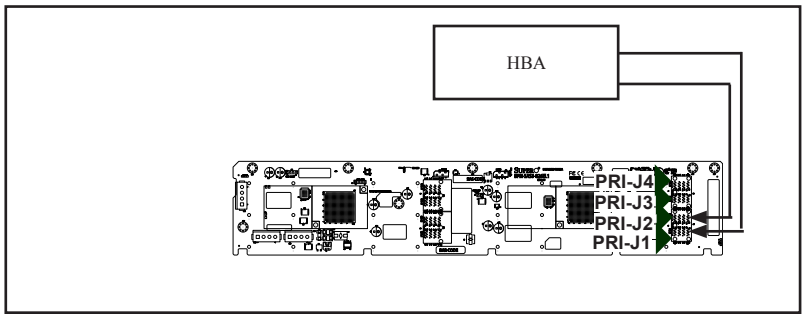

Figure F-12. Single Internal Host Bus Adapter

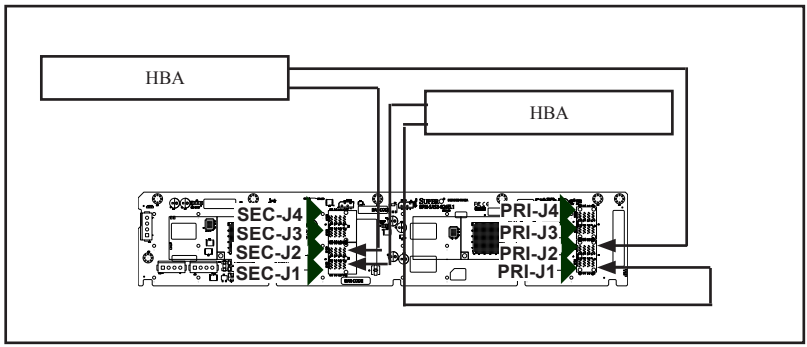

Figure F-13. Dual Internal Host Bus Adapter

Supported Internal HBA Cables

Use the following cables to create connections between the internal HBA and BPN-SAS3-826EL model backplane. The cables required depend upon the HBA connector.

IMPORTANT: See Section 3-3 of this manual, *Failover with RAID Cards and Multiple HBAs* for important information on supported configurations.

Cable Name: Internal iPass (Mini-SAS) to HD (Mini-SAS)

Part #: CBL-SAST-0508-01	**Length:** 50 cm (19 inches)
Part #: CBL-SAST-0507-01	**Length:** 80 cm (31 inches)

Description: This cable has an iPass (SFF-8087/Mini-SAS) connector (36-pin) at one end and a Mini-SAS HD (SFF-8643) connector at the other end. It connects from the SAS2 HBA to the BPN-SAS3-826EL model backplane.

Cable name: Internal HD (Mini-SAS) to HD (Mini-SAS)

Part #: CBL-SAST-0568	**Length:** 35 cm (13 inches)
Part #: CBL-SAST-0593	**Length:** 60 cm (23 inches)
Part #: CBL-SAST-0531	**Length:** 80 cm (31 inches)

Description: This cable has a Mini-SAS HD (SFF-8643) connector at both ends. It connects from the SAS3 HBA to the BPN-SAS2-826EL model backplane.

Connecting an External HBA to the Backplane

This backplane supports external host bus adapters. In this configuration, the HBA and the backplane are in different physical chassis. This allows a JBOD (Just a Bunch Of Drives) configuration from an existing system.

Single External Host Bus Adapter

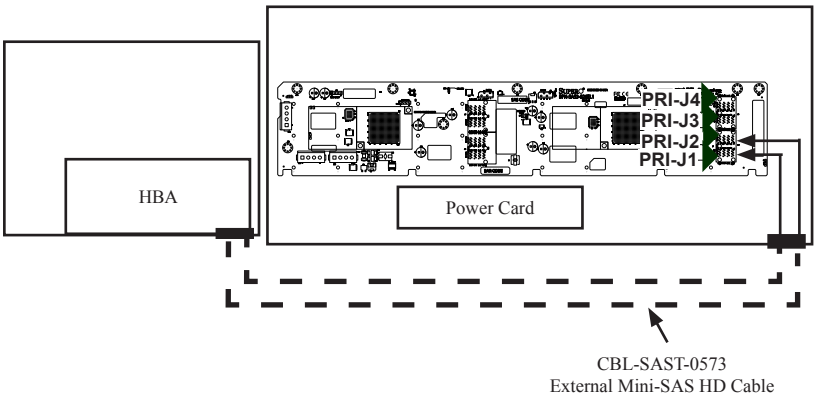

Figure F-14. Single External Host Adapter

Dual External Host Bus Adapter

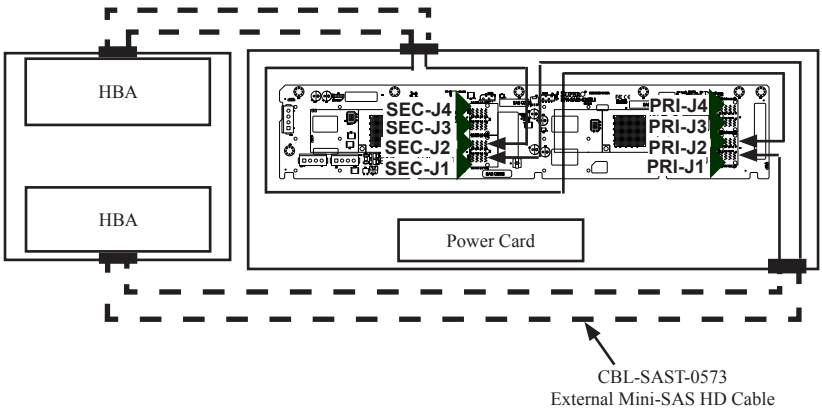

Figure F-15. Dual External Host Bus Adapter

IMPORTANT: See Section 3-3 of this manual, *Failover with RAID Cards and Multiple HBAs* for important information on supported configurations.

Connecting Multiple Backplanes in a Single Channel Environment

This section describes the cables used when cascading from a single HBA. These connections use CBL-SAST-0531 internal cables and CBL-SAST-0573 external cables.

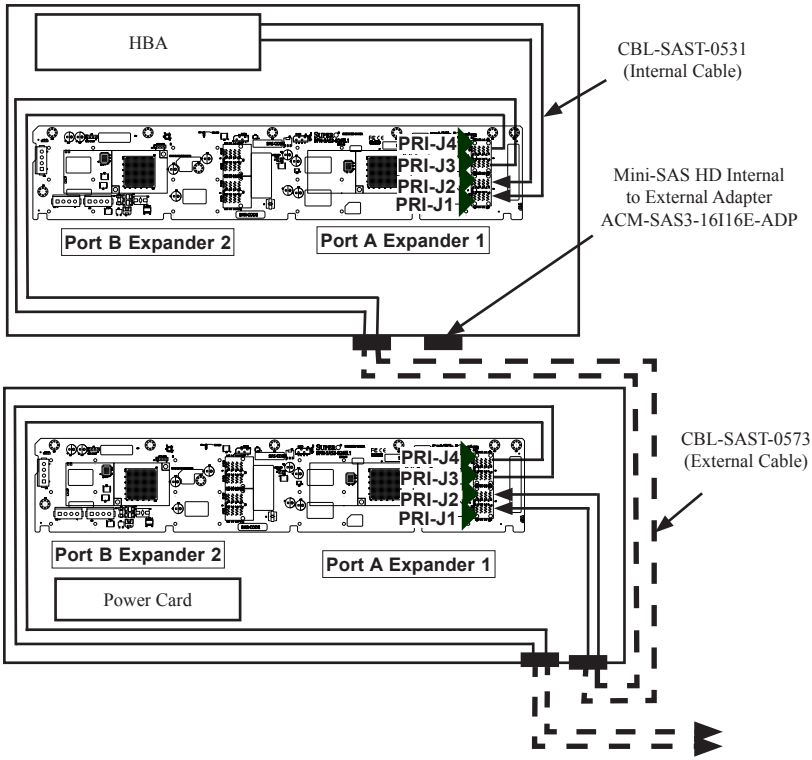

Figure F-16. Single HBA Configuration

Single HBA Configuration Cables



Figure F-17 External Mini-SAS HD to External Mini-SAS HD Cable

Cable Name: 1 Meter External Mini-SAS HD to External Mini-SAS HD Cable

Part #: CBL-SAST-0573
Ports: Single
Placement: External Cable
Description: External cascading cable, connects ports between servers and JBODs.



Figure F-18. Mini-SAS HD Internal to External Adapter

Cable Name: 16-port Mini-SAS HD Internal to External Cable Adapter with LP Bracket

Part #: AOM-SAS3-16I16E-LP
Ports: Four wide-ports (sixteen ports total)
Placement: Internal cable with adapter
Description: Internal cable, connects the SAS3 backplane to external ports.

Connecting Multiple Backplanes in a Dual Channel Environment

This section describes the cables used when cascading from dual HBAs. These connections use CBL-SAST-0531 internal cables and CBL-SAST-0573 external cables.

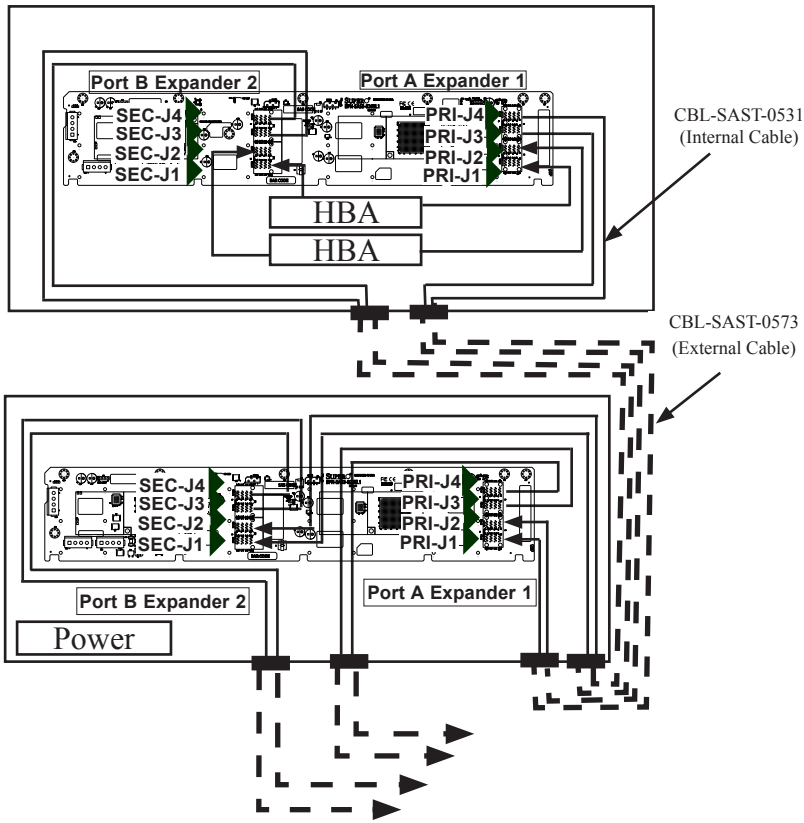

Figure F-19 Dual HBA Configuration

IMPORTANT: See the section of this manual, *Failover with RAID Cards and Multiple HBAs* for important information on supported configurations.

Disclaimer (cont.)

The products sold by Supermicro are not intended for and will not be used in life support systems, medical equipment, nuclear facilities or systems, aircraft, aircraft devices, aircraft/emergency communication devices or other critical systems whose failure to perform be reasonably expected to result in significant injury or loss of life or catastrophic property damage. Accordingly, Supermicro disclaims any and all liability, and should buyer use or sell such products for use in such ultra-hazardous applications, it does so entirely at its own risk. Furthermore, buyer agrees to fully indemnify, defend and hold Supermicro harmless for and against any and all claims, demands, actions, litigation, and proceedings of any kind arising out of or related to such ultra-hazardous use or sale.