X10DRC-T4+
X10DRC-LN4+
X10DRi-T4+
X10DRi-LN4+

USER'S MANUAL

Revision 1.2

The information in this user's manual has been carefully reviewed and is believed to be accurate. The vendor assumes no responsibility for any inaccuracies that may be contained in this document, and makes no commitment to update or to keep current the information in this manual, or to notify any person or organization of the updates. **Please Note: For the most up-to-date version of this manual, please see our website at www.supermicro.com.**

Super Micro Computer, Inc. ("Supermicro") reserves the right to make changes to the product described in this manual at any time and without notice. This product, including software and documentation, is the property of Supermicro and/or its licensors, and is supplied only under a license. Any use or reproduction of this product is not allowed, except as expressly permitted by the terms of said license.

IN NO EVENT WILL SUPER MICRO COMPUTER, INC. BE LIABLE FOR DIRECT, INDIRECT, SPECIAL, INCIDENTAL, SPECULATIVE OR CONSEQUENTIAL DAMAGES ARISING FROM THE USE OR INABILITY TO USE THIS PRODUCT OR DOCUMENTATION, EVEN IF ADVISED OF THE POSSIBILITY OF SUCH DAMAGES. IN PARTICULAR, SUPER MICRO COMPUTER, INC. SHALL NOT HAVE LIABILITY FOR ANY HARDWARE, SOFTWARE, OR DATA STORED OR USED WITH THE PRODUCT, INCLUDING THE COSTS OF REPAIRING, REPLACING, INTEGRATING, INSTALLING OR RECOVERING SUCH HARDWARE, SOFTWARE, OR DATA.

Any disputes arising between the manufacturer and the customer shall be governed by the laws of Santa Clara County in the State of California, USA. The State of California, County of Santa Clara shall be the exclusive venue for the resolution of any such disputes. Supermicro's total liability for all claims will not exceed the price paid for the hardware product.

FCC Statement: This equipment has been tested and found to comply with the limits for a Class A digital device pursuant to Part 15 of the FCC Rules. These limits are designed to provide reasonable protection against harmful interference when the equipment is operated in a commercial environment. This equipment generates, uses, and can radiate radio frequency energy and, if not installed and used in accordance with the manufacturer's instruction manual, may cause harmful interference with radio communications. Operation of this equipment in a residential area is likely to cause harmful interference, in which case you will be required to correct the interference at your own expense.

California Best Management Practices Regulations for Perchlorate Materials: This Perchlorate warning applies only to products containing CR (Manganese Dioxide) Lithium coin cells. "Perchlorate Material-special handling may apply. See www.dtsc.ca.gov/hazardouswaste/perchlorate".

WARNING: This product can expose you to chemicals including lead, known to the State of California to cause cancer and birth defects or other reproductive harm. For more information, go to www.P65Warnings.ca.gov.

The products sold by Supermicro are not intended for and will not be used in life support systems, medical equipment, nuclear facilities or systems, aircraft, aircraft devices, aircraft/emergency communication devices or other critical systems whose failure to perform be reasonably expected to result in significant injury or loss of life or catastrophic property damage. Accordingly, Supermicro disclaims any and all liability, and should buyer use or sell such products for use in such ultra-hazardous applications, it does so entirely at its own risk. Furthermore, buyer agrees to fully indemnify, defend and hold Supermicro harmless for and against any and all claims, demands, actions, litigation, and proceedings of any kind arising out of or related to such ultra-hazardous use or sale.

Manual Revision 1.2
Release Date: October 16, 2018
Unless you request and receive written permission from Super Micro Computer, Inc., you may not copy any part of this document.
Information in this document is subject to change without notice. Other products and companies referred to herein are trademarks or registered trademarks of their respective companies or mark holders.
Copyright © 2018 by Super Micro Computer, Inc.
All rights reserved.
Printed in the United States of America

Preface

This manual is written for system integrators, IT Professionals, and knowledgeable end users. It provides information for the installation and use of the X10DRC/i-LN4+/-T4+ motherboard.

About This Motherboard

The Super X10DRC/i-LN4+/-T4+ motherboard supports dual Intel E5-2600v3/v4 Series processors (Socket R3) that offer the new Intel Microarchitecture 22nm (E5-2600v3)/14nm (E5-2600v4) Processing Technology, delivering the most-balanced solution of performance, power efficiency, and features to address the diverse needs of next-generation data centers. With the PCH C612 built in, the X10DRC/i-LN4+/-T4+ motherboard supports MCTP Protocol, and Intel® Node Manager 3.0. This motherboard is ideal for visualization, CRM, storage, and general server platforms. Please refer to our website (http://www.supermicro.com) for CPU and memory support updates.

Manual Organization

Chapter 1 describes the features, specifications, and performance of the motherboard. It also provides detailed information about the Intel PCH C612 chipset.

Chapter 2 provides hardware installation instructions. Read this chapter when installing the processor, memory modules, and other hardware components into the system. If you encounter any problems, see **Chapter 3**, which describes troubleshooting procedures for video, memory, and system setup stored in the CMOS.

Chapter 4 includes an introduction to BIOS, and provides detailed information on running the BIOS Setup utility.

Appendix A provides BIOS Error Beep Codes.

Appendix B lists Software Installation Instructions**.**

Appendix C contains UEFI BIOS Recovery instructions.

Conventions Used in the Manual

Pay special attention to the following symbols for proper system installation:

Warning: Important information given to ensure proper system installation or to prevent damage to the components or injury to yourself;

Note: Additional information given to differentiate between models or instructions provided for proper system setup.

Contacting Supermicro

Headquarters

Address:	Super Micro Computer, Inc.
	980 Rock Ave.
	San Jose, CA 95131 U.S.A.
Tel:	+1 (408) 503-8000
Fax:	+1 (408) 503-8008
Email:	marketing@supermicro.com (General Information)
	support@supermicro.com (Technical Support)
Website:	www.supermicro.com

Europe

Address:	Super Micro Computer B.V.
	Het Sterrenbeeld 28, 5215 ML
	's-Hertogenbosch, The Netherlands
Tel:	+31 (0) 73-6400390
Fax:	+31 (0) 73-6416525
Email:	sales@supermicro.nl (General Information)
	support@supermicro.nl (Technical Support)
	rma@supermicro.nl (Customer Support)
Website:	www.supermicro.nl

Asia-Pacific

Address:	Super Micro Computer, Inc.
	3F, No. 150, Jian 1st Rd.
	Zhonghe Dist., New Taipei City 235
	Taiwan (R.O.C)
Tel:	+886-(2) 8226-3990
Fax:	+886-(2) 8226-3992
Email:	support@supermicro.com.tw
Website:	www.supermicro.com.tw

Table of Contents

Preface

Chapter 1 Overview

1-1 Overview 1-1
1-2 Processor and Chipset Overview 1-11
1-3 Special Features 1-12
1-4 System Health Monitoring 1-12
1-5 ACPI Features 1-13
1-6 Power Supply 1-13
1-7 Advanced Power Management 1-14
Intel® Intelligent Power Node Manager (NM) (Available when the Supermicro Power Manager [SPM] is Installed) 1-14
Management Engine (ME) 1-14

Chapter 2 Installation

2-1 Standardized Warning Statements 2-1
2-2 Static-Sensitive Devices 2-4
2-3 Motherboard Installation 2-5
2-4 Processor and Heatsink Installation 2-7
Installing the LGA2011 Processor 2-7
Installing a Passive CPU Heatsink 2-11
Removing the Heatsink 2-12
2-5 Installing and Removing the Memory Modules 2-13
Installing & Removing DIMMs 2-13
Removing Memory Modules 2-13
2-6 Control Panel Connectors and I/O Ports 2-16
Back Panel Connectors and I/O Ports 2-16
Back Panel I/O Port Locations and Definitions 2-16
Serial Ports 2-17
Video Connection 2-17
Universal Serial Bus (USB) 2-18
GLAN/10G-LAN (TLAN) Ports & IPMI_LAN Port 2-19
Unit Identifier Switch/UID LED Indicator 2-20
Front Control Panel 2-21
Front Control Panel Pin Definitions 2-22
NMI Button 2-22
Power LED 2-22

HDD/UID LED 2-23
NIC1/NIC2 LED Indicators 2-23
Overheat (OH)/Fan Fail/PWR Fail/UID LED 2-24
Power Fail LED 2-24
Reset Button 2-25
Power Button 2-25
2-7 Connecting Cables 2-26
Power Connectors 2-26
Fan Headers 2-27
Chassis Intrusion 2-27
Internal Speaker 2-28
DOM Power Connectors 2-28
TPM/Port 80 Header 2-29
Standby Power Header 2-29
Power SMB (I^2C) Connector 2-30
IPMB 2-30
T-SGPIO1/2 & S-SGPIO1 Headers 2-31
Power LED/Speaker 2-31
2-8 Jumper Settings 2-32
Explanation of Jumpers 2-32
LAN Enable/Disable 2-32
CMOS Clear 2-33
Watch Dog Enable/Disable 2-33
VGA Enable 2-34
BMC Enable 2-34
Manufacturer Mode Select 2-35
SAS Enable (For X10DRC-LN4+/T4+) 2-35
2-9 LED Indicators 2-36
LAN Port LEDs 2-36
IPMI Dedicated LAN LEDs 2-36
Onboard Power LED 2-37
BMC Heartbeat LED 2-37
SAS Heartbeat LED (for the X10DRC-LN4+/T4+ only) 2-38
SAS Activity LED (for the X10DRC-LN4+/T4+ only) 2-38
SAS Error LED (for the X10DRC-LN4+/T4+ only) 2-39
2-10 SATA/SAS Connections 2-40
SATA 3.0 Ports 2-40

SAS 3.0 Ports (for the X10DRC-LN4+/T4+) 2-41

Chapter 3 Troubleshooting

3-1 Troubleshooting Procedures 3-1
3-2 Technical Support Procedures 3-5
3-3 Battery Removal and Installation 3-6
3-4 Frequently Asked Questions 3-7
3-5 Returning Merchandise for Service..... 3-8

Chapter 4 BIOS

4-1 Introduction..... 4-1
4-2 Main Setup 4-2
4-3 Advanced Setup Configurations..... 4-4
4-4 Event Logs 4-32
4-5 IPMI 4-34
4-6 Security Settings 4-36
4-7 Boot Settings..... 4-37
4-8 Save & Exit 4-39

Appendix A BIOS Error Beep Codes

BIOS Error Beep Codes..... A-1

Appendix B Software Installation Instructions

B-1 Installing Software Programs B-1
B-2 Installing SuperDoctor5..... B-2

Appendix C UEFI BIOS Recovery Instructions

C-1 An Overview to the UEFI BIOS C-1
C-2 How to Recover the UEFI BIOS Image C-1
C-3 To Recover the Main BIOS Block Using a USB-Attached Device..... C-1

Chapter 1

Overview

1-1 Overview

Checklist

Congratulations on purchasing your computer motherboard from an acknowledged leader in the industry. Supermicro boards are designed with the utmost attention to detail to provide you with the highest standards in quality and performance.

Please check that the following items have all been included with your motherboard. If anything listed here is damaged or missing, contact your retailer.

The following items are included in the retail box.

- One (1) Supermicro Mainboard
- Two (2) SATA Cables (CBL-0044L x2) (X10DRC-LN4+/T4+ Only)
- Two (2) SAS Cables (CBL-SAST-0532 x2) (X10DRC-LN4+/T4+ Only)
- Six (6) SATA Cables (CBL-0044L x6) (X10DRi-LN4+/T4+ Only)
- One (1) I/O Shield (MCP-260-00042-0N)
- One (1) Quick Reference Guide (MNL#1560-QRG)

Note 1: For your system to work properly, please follow the links below to download all necessary drivers/utilities and the user's manual for your motherboard.

- Supermicro product manuals: http://www.supermicro.com/support/manuals/
- Product Drivers and utilities: http://www.supermicro.com/wftp

Note 2: For safety considerations, please refer to the complete list of safety warnings posted on the Supermicro website at http://www.supermicro.com/about/policies/safety_information.cfm.

If you have any questions, please contact our support team at support@supermicro.com.

SUPERO X10DRC/i-LN4+/-T4+ Motherboard Image

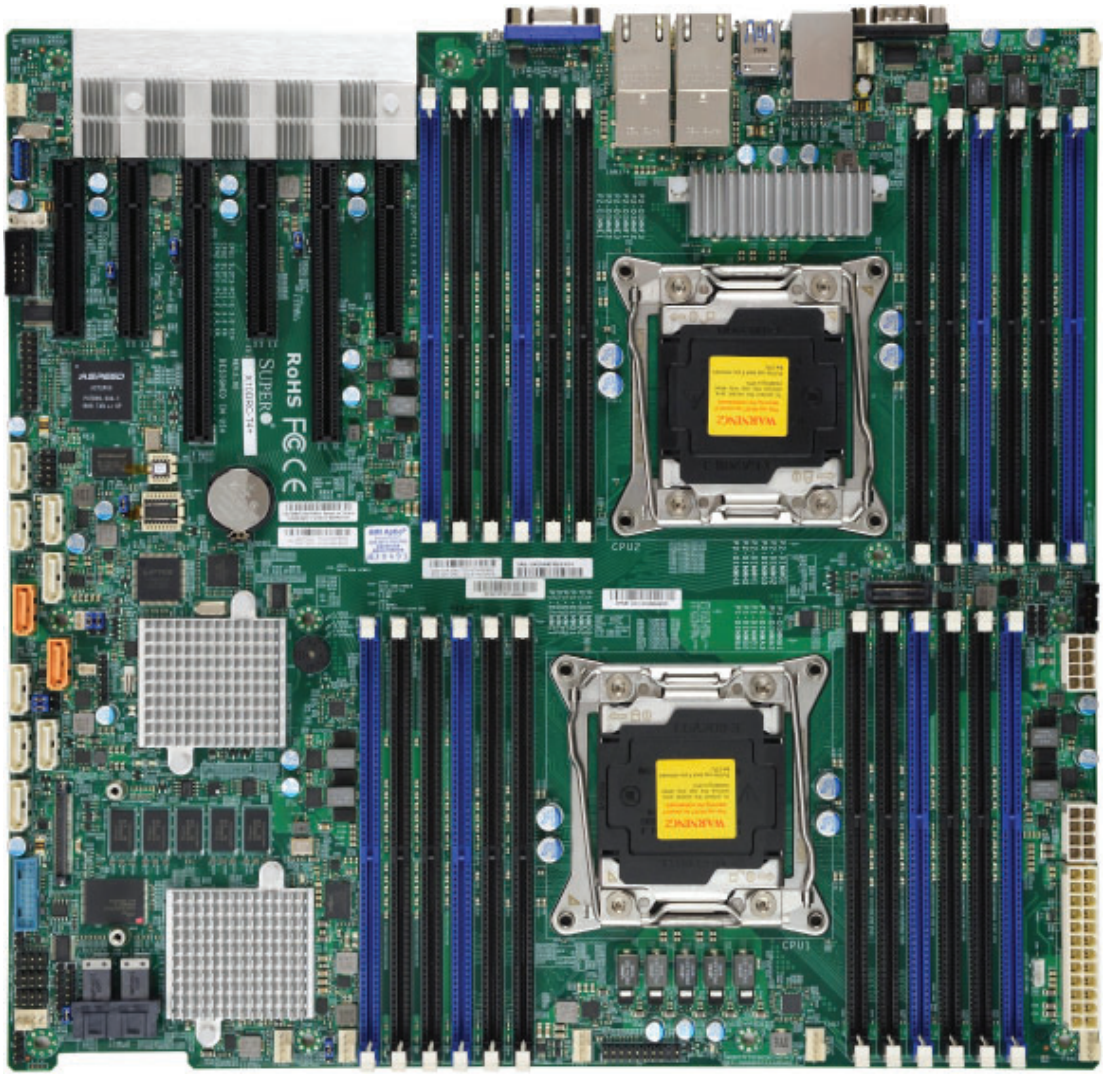

Note: All graphics shown in this manual were based upon the latest PCB Revision available at the time of publishing of the manual. The motherboard you've received may or may not look exactly the same as the graphics shown in this manual.

Motherboard Layout

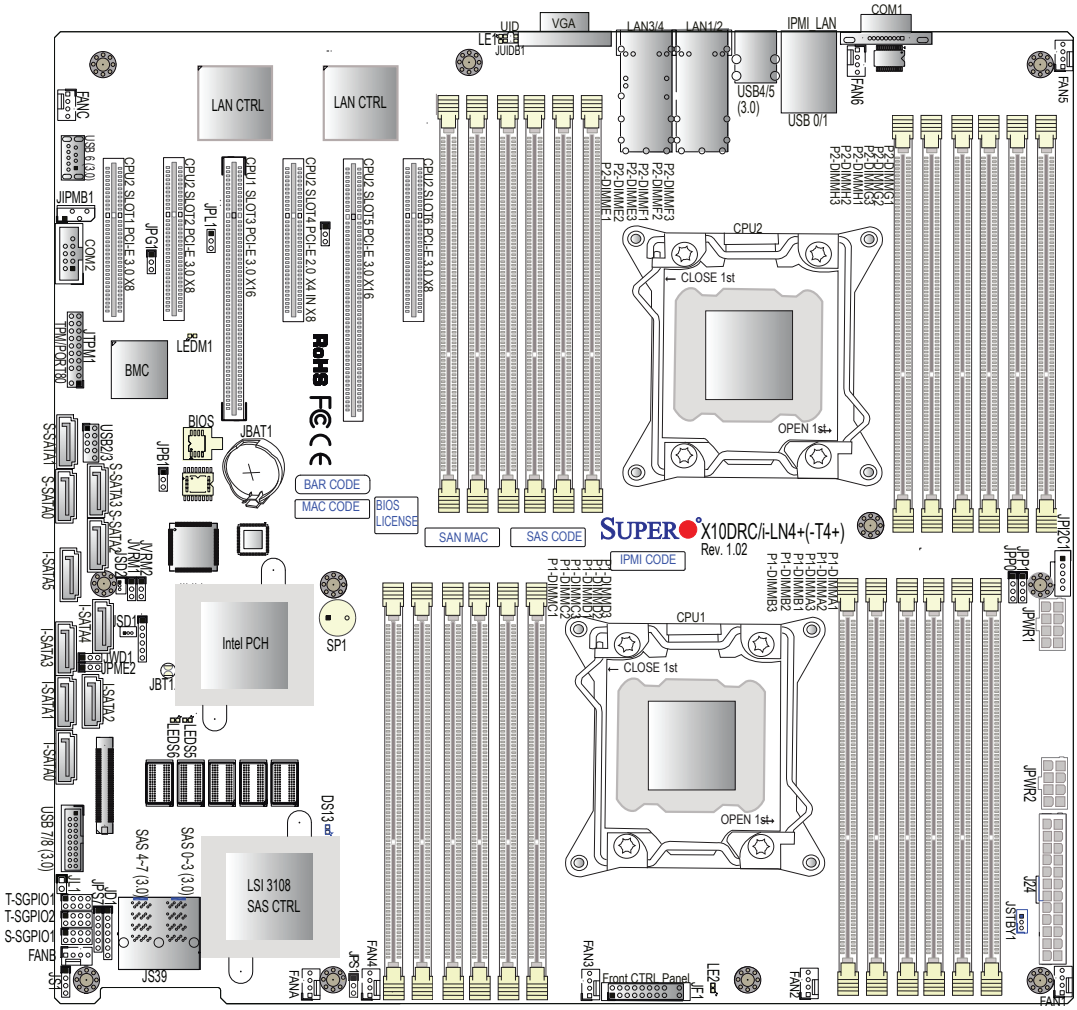

Note: For the latest CPU/Memory updates, please refer to our website at http://www.supermicro.com/products/motherboard/ for details.

X10DRC/i-LN4+/-T4+ Quick Reference

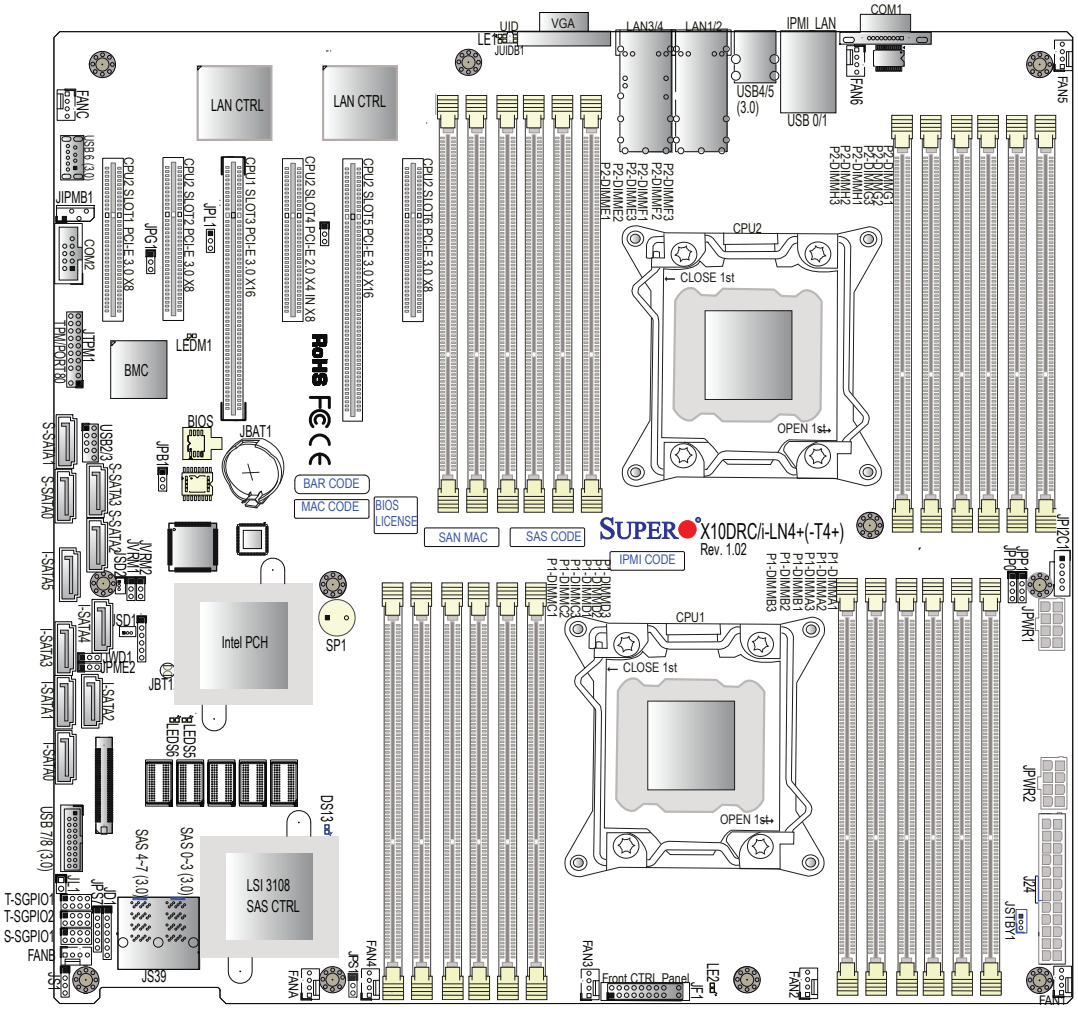

Notes:

- See Chapter 2 for detailed information on jumpers, I/O ports and JF1 front panel connections.
- "▪" indicates the location of "Pin 1".
- Jumpers/LED Indicators not indicated are for testing only.
- LAN1/LAN2/LAN3/LAN4 ports support Gigabit_LAN (GLAN) connections on the X10DRC/i-LN4+, and 10G (T) LAN connections on the X10DRC/i-T4+.
- The LSI 3108 is available on the X10DRC-LN4+/T4+ only.
- Use only the correct type of onboard CMOS battery as specified by the manufacturer. Do not install the onboard battery upside down to avoid possible explosion.

X10DRC/i-LN4+/-T4+ Jumpers

Jumper	Description	Default Setting
JBT1	Clear CMOS/Reset BIOS Configuration	See Chapter 2
JPB1	BMC Enable	Pins 1-2 (Enabled)
JPG1	VGA Enable	Pins 1-2 (Enabled)
JPL1	GLAN1/2 Enable (X10DRC/i-LN4+) 10G(T)_LAN1/2 Enable (X10DRC/i-T4+)	Pins 1-2 (Enabled)
JPL2	GLAN3/4 Enable (X10DRC/i-LN4+) 10G(T)_LAN3/4 Enable (X10DRC/i-T4+)	Pins 1-2 (Enabled)
JPME2	Manufacture (ME) Mode Select	Pins 1-2 (Normal)
JPS1	SAS Enable	Pins 1-2 (Enabled)
JWD1	Watch Dog Timer Enable	Pins 1-2 (Reset)

X10DRC/i-LN4+/-T4+ Connectors

Connectors	Description
Battery	Onboard CMOS Battery (See Chpt. 3 for Used Battery Disposal) (JBAT1)
COM1/COM2	Backplane COM Port1/Front Accessible COM2 Header
FAN1-6, FANA-C	CPU/System Fan Headers
J24	24-pin ATX Main Power Connector (See Warning on Pg. 1-6.)
JD1	Speaker/Power LED
JF1	Front Panel Control Header
JIPMB1	4-pin External BMC I^2C Header (for an IPMI Card)
JL1	Chassis Intrusion
JPI^{2}C1	Power Supply SMBbus I^2C Header
JPWR1/2	8-Pin Power Connectors
JSD1/JSD2	SATA DOM (Device on Module) Power Connectors
JTPM1	TPM (Trusted Platform Module)/Port 80 Header
JUIDB1	UID (Unit Identification) Button
LAN1/LAN2	Gigabit LAN(GLAN) Ethernet Ports 1/2 (X10DRC/i-LN4+) 10G(T) LAN Ethernet Ports 1/2 (X10DRC/i-T4+)
LAN3/LAN4	Gigabit LAN (GLAN) Ethernet Ports 3/4 (X10DRC/i-LN4+) 10G(T) LAN Ethernet Ports 3/4 (X10DRC/i-T4+)
(IPMI) LAN	IPMI_Dedicated LAN support by the ASpeed controller
(I-)SATA 0-5	SATA 3.0 Connectors supported by Intel PCH (I-SATA 0-5)
(S-)SATA 0-3	SATA 3.0 Connectors supported by Intel SCU (S-SATA 0-3)
SAS0-3, 4-7 (3.0)	SAS 3.0 Connections supported by the LSI 3108 controller (JS39) (for the X10DRC-LN4+/T4+ only)
(CPU2) Slot1	PCI-Express 3.0 x8 Slot from CPU2

(CPU2) Slot2	PCI-Express 3.0 x8 Slot from CPU2
(CPU1) Slot3	PCI-Express 3.0 x16 Slot from CPU1
(CPU2) Slot4	PCI-Express 2.0 x4 in x8 Slot from CPU2
(CPU2) Slot5	PCI-Express 3.0 x16 Slot from CPU2
(CPU2) Slot6	PCI-Express 3.0 x8 Slot from CPU2
S-SGPIO1, T-SGPIO1/2	Serial_Link General Purpose I/O Headers 1/2/3 (for SATA ports), (T-SGPIO1 for I-SATA0-3, T-SGPIO2 for I-SATA4/5, S-SGPIO1 for S-SATA0-3)
SP1	Internal Speaker/Buzzer
JSTBY1	+5V Standby Power Header
(BP) USB 0/1 (2.0)	Backpanel USB 2.0 Ports 0/1
(BP) USB 4/5 (3.0)	Backpanel USB 3.0 Ports 4/5
(FP) USB 7/8 (3.0)	Front Accessible USB 3.0 Connection Header 7/8
(FP) USB 2/3 (2.0)	Front Accessible USB 2.0 Connection Header 2/3
(FP) USB 6 (3.0)	Front Accessible USB 3.0 Connection Header 6
VGA	Backpanel VGA Port

X10DRC/i-LN4+/-T4+ LED Indicators

LED	Description	State	Status
DS13 (Note below)	SAS Heartbeat LED	Green: Blinking	SAS Normal
LE1	Rear UID LED	Blue: On	Unit Identified
LE2	Onboard Power LED	Green: On	System PWR On
LEDM1	BMC Heartbeat LED	Green: Blinking	BMC Normal
LEDS5 (Note below)	SAS Activity LED	Green: Blinking	SAS Active
LEDS6 (Note below)	SAS Error LED	Red: On	SAS Error(s)

Note: Available on the X10DRC-LN4+/T4+ only.

Warning: To avoid damaging the power supply or the motherboard, be sure to use a power supply that contains a 24-pin and two 8-pin power connectors. Be sure to connect the power supply to the 24-pin power connector (J24), and two 8-pin power connectors (JPWR1, JPWR2) on the motherboard. Failure in doing so may void the manufacturer warranty on your power supply and motherboard.

Motherboard Features

CPU	• Dual Intel® E5-2600v3/v4 Series Processors (Socket R3-LGA 2011); each processor supports dual full-width Intel QuickPath Interconnect (QPI) links (of up to 9.6 GT/s one direction per QPI) **Notes**: 1. E5-2600v4 requires Revision 2.0 BIOS (or higher). 2. E5-2600v3 is fully back-compatible with all BIOS revisions.	
Memory	• Integrated memory controller supports: up to 1536 GB of Load Reduced (LRDIMM) or up to 768 GB of Registered (RDIMM) DDR4 (288-pin) ECC modules 2400/2133/1866/1600 MHz in 24 slots **Note**: Memory speed support is depending on the CPUs used in the motherboard. For the latest CPU/memory updates, please refer to our website at http://www.supermicro.com/products/motherboard. Please also refer to the DDR4 Memory Configuration Guide at http://www.supermicro.com/support/resources/memory/X10_memory_config_guide.pdf".	
	DIMM sizes	
	• DIMM	Up to 64 GB (per DIMM) @ 1.2V
Chipset	• Intel® PCH C612	
Expansion Slots	• Three (3) PCI Express 3.0 x8 slots (CPU2 Slot1/Slot2/Slot6) • Two (2) PCI-Express 3.0 x16 slots (CPU1 Slot3/CPU2 Slot5) • One (1) PCI-Express 2.0 x4 in x8 slot (CPU2 Slot4)	
Graphics	• Graphics Controller via ASpeed AST 2400 BMC	
Network	• Dual Intel i350 1GBASE-T (10/100/1000 Mb/s) Ethernet controllers for GLAN1-GLAN4 ports (X10DRC/i-LN4+), or • Dual Intel X540 10GBASE-T (100/1000/10000 Mb/s) Ethernet controllers for TLAN1-TLAN4 ports (X10DRC/i-T4+)	

	• ASpeed 2400 Baseboard Controller (BMC) supports IPMI_LAN 2.0	
I/O Devices	**SATA Connections**	
	• SATA 3.0	Six (6) SATA 3.0 Ports supported by Intel PCH (I-SATA 0-5), Four (4) SATA 3.0 Ports supported by Intel SCU (S-SATA 0-3)
	• RAID	0, 1, 5, 10 (from Intel PCH)
	SAS Connections (for the X10DRC-LN4+/T4+)	
	• SAS 3.0	Eight (8) SAS Connections 0-3, 4-7 from the LSI 3108 controller
	• RAID	0, 1, 5, 6, 10, 50, and 60 (from the LSI SAS controller with optional SuperCAP for battery backup. See Note 1 next page.)
	IPMI 2.0	
	• IPMI 2.0 supported by ASpeed AST 2400	
	Serial (COM) Port	
	• One (1) Fast UART 16550 Port • One (1) Header	
Peripheral Devices	**USB Devices**	
	• Two (2) USB 2.0 ports (USB 0/1) and two (2) USB 3.0 ports (USB 4/5) on the I/O backpanel	
	• One (1) internal USB 2.0 header for two (2) USB connections for front panel support (USB 2/3) • One (1) internal USB 3.0 header for two (2) USB connections for front panel support (USB 7/8)	
	• One (1) USB 3.0 Type A connector (USB 6)	
BIOS	• 16 MB SPI AMI BIOS® SM Flash UEFI BIOS	
	• APCI 2.3, ACPI 2.0/3.0/4.0, USB Keyboard, Plug & Play (PnP) and SMBIOS 2.3	
Power Management	• ACPI Power Management	
	• Main switch override mechanism	

	• Power-on mode for AC power recovery
	• Intel® Intelligent Power Node Manager 3.0 (Available when the Supermicro Power Manager (SPM) is installed and special power supply used. See Page 1-14.)
	• Management Engine (ME)
CPU Monitoring	**CPU Monitoring**
	• Onboard voltage monitoring for +3.3V, 3.3V Standby, +5V, +5V Standby, +12V, CPU core, memory, chipset, BMC, and battery voltages
	• CPU/System overheat LED and control
	• CPU Thermal Trip support
	• Status Monitor for Speed Control
	• Status Monitor for On/Off Control
	• CPU Thermal Design Power (TDP): support up to 145W (See Note 2 below)
	Fan Control
	• Fan status monitoring via IPMI connections
	• Dual Cooling Zone
	• Multi-speed fan control via onboard BMC
	• Pulse Width Modulation (PWM) fan contorl
System Management	• PECI (Platform Environment Configuration Interface) 2.0 support
	• UID (Unit Identification)/Remote UID
	• System resource alert via SuperDoctor 5
	• SuperDoctor® 5, Watch Dog, NMI
	• Chassis Intrusion Header and Detection
Dimensions	• 13.68" (L) x 13.05" (W) (347.47 mm x 331.47 mm)

Note 1: For SAS is supported by the onboard LSI3108 controller, and is available on the X10DRC-LN4+/T4+ only)

Note 2: CPU Maximum Thermal Design Power (TDP) is subject to chassis and heatsink cooling restrictions. For proper thermal management, please check the chassis and heatsink specifications for proper CPU TDP sizing.

Note 3: For IPMI Configuration Instructions, please refer to the Embedded IPMI Configuration User's Guide available @ http://www.supermicro.com/support/manuals/.

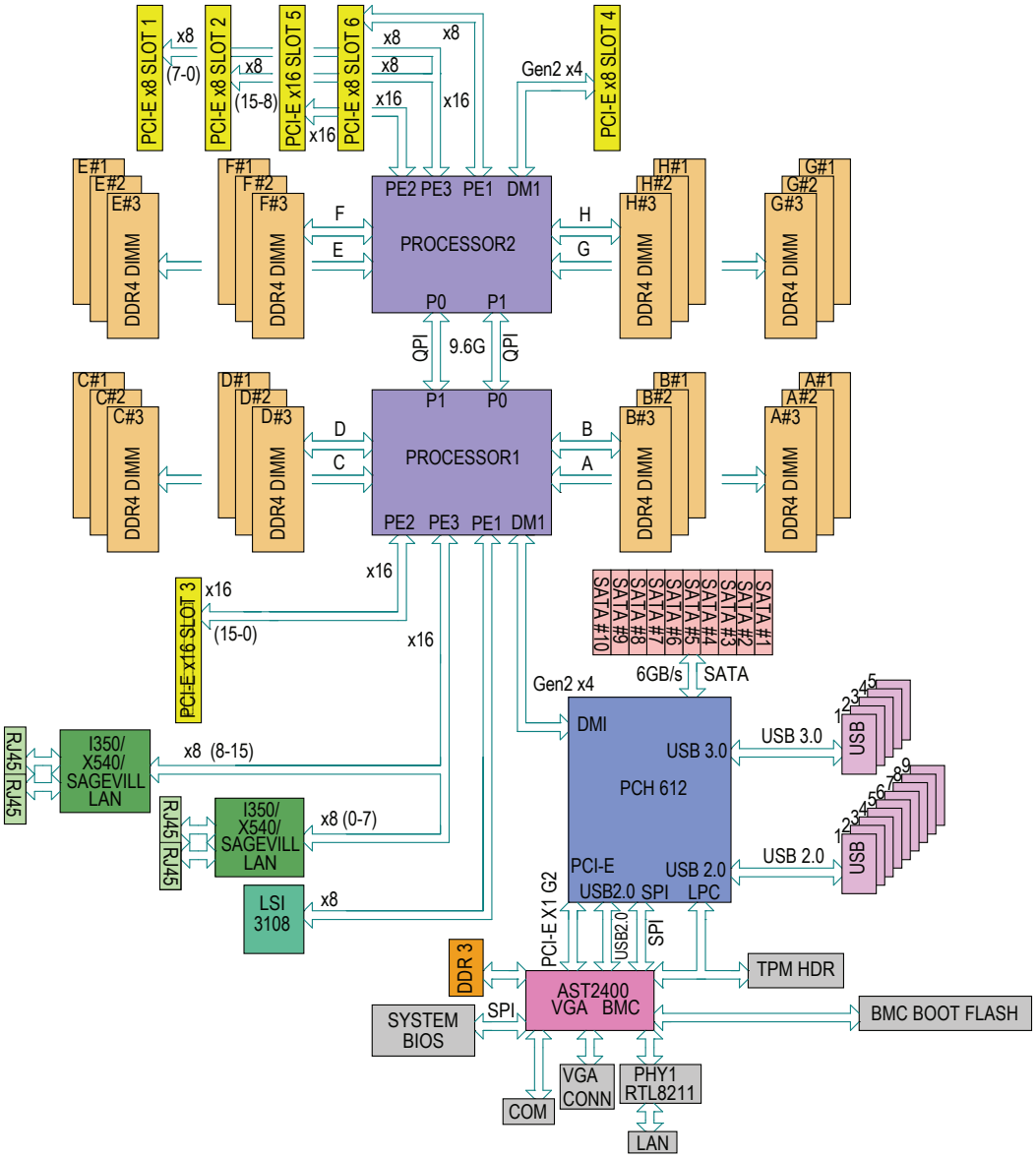

System Block Diagram

Note 1: This is a general block diagram and may not exactly represent the features on your motherboard. See the Motherboard Features pages for the actual specifications of each motherboard.

Note 2: Both CPU's need to be installed for full access the PCI-E slots and on-board controllers. See the attached block diagram to determine which PCI-E slots or devices may be impacted.

1-2 Processor and Chipset Overview

Built upon the functionality and capability of the Intel E5-2600v3/v4 Series Processors (Socket R3) and the Intel C612 PCH, the X10DRC/i-LN4+/-T4+ motherboard provides the best balanced solution of performance, power efficiency, and features to address the diverse needs of next-generation data server platforms.

With support of new Intel Microarchitecture 22nm (E5-2600v3)/14nm (E5-2600v4) Process Technology, the X10DRC/i-LN4+/-T4+ dramatically increases system performance for a multitude of server applications.

The PCH C612 chip provides Enterprise SMbus and MCTP support, including the following features:

- DDR4 288-pin memory support on Socket R3
- Support for MCTP Protocol and ME
- Support of SMBus speeds of up to 1 MHz for BMC connectivity
- Improved I/O capabilities to high-storage-capacity configurations
- SPI Enhancements
- Intel® Node Manager 3.0 support (See Note below.)
- BMC supports remote management, virtualization, and the security package for enterprise platforms

Notes:

1. E5-2600v4 requires Revision 2.0 BIOS (or higher).
2. E5-2600v3 is fully backward-compatible with all BIOS revisions.
3. Node Manager 3.0 support is dependent on the power supply used in the system.

1-3 Special Features

Recovery from AC Power Loss

The Basic I/O System (BIOS) provides a setting that determines how the system will respond when AC power is lost and then restored to the system. You can choose for the system to remain powered off (in which case you must press the power switch to turn it back on), or for it to automatically return to the power-on state. See the Advanced BIOS Setup section for this setting. The default setting is **Last State**.

1-4 System Health Monitoring

This section describes the features of system health monitoring of the motherboard. This motherboard has an onboard BaseBoard Management Controller (BMC) that supports system health monitoring. An onboard voltage monitor will scan the following onboard voltages continuously: +3.3V, 3.3V Standby, +5V, +5V Standby, +12V, CPU core, memory, chipset, BMC, and battery voltages. Once a voltage becomes unstable, a warning is given, or an error message is sent to the screen. The user can adjust the voltage thresholds inside the BMC Web GUI to define the sensitivity of the voltage monitor.

Fan Status Monitor with Firmware Control

System health monitoring support provided by the BMC controller can check the RPM status of a cooling fan. The onboard CPU and chassis fans are controlled by IPMI Thermal Management.

Environmental Temperature Control

System health sensors monitor temperatures and voltage settings of onboard processors and the system in real time via the IPMI interface. Whenever the temperature of the CPU or the system exceeds a user-defined threshold, system/CPU cooling fans will be turned on to prevent the CPU or the system from overheating.

Note: To avoid possible system overheating, please be sure to provide adequate airflow to your system.

System Resource Alert

This feature is available when used with SuperDoctor 5. SuperDoctor 5 is used to notify the user of certain system events. For example, you can configure SuperDoctor 5 to provide you with warnings when the system temperature, CPU temperatures, voltages, and fan speeds go beyond a predefined range.

1-5 ACPI Features

ACPI stands for Advanced Configuration and Power Interface. The ACPI specification defines a flexible and abstract hardware interface that provides a standard way to integrate power management features throughout a system, including its hardware, operating system and application software. This enables the system to automatically turn on and off peripherals such as CD-ROMs, network cards, hard disk drives and printers.

In addition to operating system-directed power management, ACPI also provides a generic system event mechanism for Plug and Play, and an operating system-independent interface for configuration control. ACPI leverages the Plug and Play BIOS data structures, while providing a processor architecture-independent implementation that is compatible with Windows 8/R2, and Windows 2012/R2 Operating Systems.

1-6 Power Supply

As with all computer products, a stable power source is necessary for proper and reliable operation. It is even more important for processors that have high CPU clock rates.

The X10DRC/i-LN4+/-T4+ motherboard accommodates 24-pin ATX power supplies. Although most power supplies generally meet the specifications required by the CPU, some are inadequate. In addition, two 8-pin power connections are also required to ensure adequate power supply to the system.

Warning! To avoid damaging the power supply or the motherboard, be sure to use a power supply that contains a 24-pin and two 8-pin power connectors. Be sure to connect the power supply to the 24-pin power connector (J24), and two 8-pin power connectors (JPWR1, JPWR2) on the motherboard. Failure in doing so may void the manufacturer warranty on your power supply and motherboard.

It is strongly recommended that you use a high quality power supply that meets ATX power supply Specification 2.02 or above. It must also be SSI compliant. (For more information, please refer to the website at http://www.ssiforum.org/). Additionally, in areas where noisy power transmission is present, you may choose to install a line filter to shield the computer from noise. It is recommended that you also install a power surge protector to help avoid problems caused by power surges.

1-7 Advanced Power Management

The following new advanced power management features are supported by this motherboard:

Intel® Intelligent Power Node Manager (NM) (Available when the Supermicro Power Manager [SPM] is Installed)

The Intel® Intelligent Power Node Manager 3.0 (IPNM) provides your system with real-time thermal control and power management for maximum energy efficiency. Although IPNM Specification Version 2.0/3.0 is supported by the BMC (Baseboard Management Controller), your system must also have IPNM-compatible Management Engine (ME) firmware installed to use this feature.

Note: IPNM 2.0/3.0 support is dependent on the power supply used in the system.

Management Engine (ME)

The Management Engine, which is an ARC controller embedded in the PCH, provides Server Platform Services (SPS) to your system. The services provided by SPS are different from those provided by the ME on client platforms.

Chapter 2

Installation

2-1 Standardized Warning Statements

The following statements are industry-standard warnings, provided to warn the user of situations which have the potential for bodily injury. Should you have questions or experience difficulty, contact Supermicro's Technical Support department for assistance. Only certified technicians should attempt to install or configure components.

Read this section in its entirety before installing or configuring components in the Supermicro chassis.

Battery Handling

Warning!

There is a danger of explosion if the battery is replaced incorrectly. Replace the battery only with the same or equivalent type recommended by the manufacturer. Dispose of used batteries according to the manufacturer's instructions

電池の取り扱い

電池交換が正しく行われなかった場合、破裂の危険性があります。交換する電池はメーカーが推奨する型、または同等のものを使用下さい。使用済電池は製造元の指示に従って処分して下さい。

警告
电池更换不当会有爆炸危险。请只使用同类电池或制造商推荐的功能相当的电池更换原有电池。请按制造商的说明处理废旧电池。

警告
電池更換不當會有爆炸危險。請使用製造商建議之相同或功能相當的電池更換原有電池。請按照製造商的說明指示處理廢棄舊電池。

Warnung

Bei Einsetzen einer falschen Batterie besteht Explosionsgefahr. Ersetzen Sie die Batterie nur durch den gleichen oder vom Hersteller empfohlenen Batterietyp. Entsorgen Sie die benutzten Batterien nach den Anweisungen des Herstellers.

Attention

Danger d'explosion si la pile n'est pas remplacée correctement. Ne la remplacer que par une pile de type semblable ou équivalent, recommandée par le fabricant. Jeter les piles usagées conformément aux instructions du fabricant.

¡Advertencia!

Existe peligro de explosión si la batería se reemplaza de manera incorrecta. Reemplazar la batería exclusivamente con el mismo tipo o el equivalente recomendado por el fabricante. Desechar las baterías gastadas según las instrucciones del fabricante.

אזהרה !

קיימת סכנת פיצוץ של הסוללה במידה והוחלפה בדרך לא תקינה. יש להחליף את הסוללה בסוג התואם מחברת יצרן מומלצת.

סילוק הסוללות המשומשות יש לבצע לפי הוראות היצרן.

هناك خطر من انفجار في حالة استبدال البطارية بطريقة غير صحيحة فعليك استبدال البطارية
فقط بنفس النوع أو ما يعادلها كما أوصت به الشركة المصنعة
تخلص من البطاريات المستعملة وفقا لتعليمات الشركة الصانعة

경고!

배터리가 올바르게 교체되지 않으면 폭발의 위험이 있습니다. 기존 배터리와 동일하거나 제조사에서 권장하는 동등한 종류의 배터리로만 교체해야 합니다. 제조사의 안내에 따라 사용된 배터리를 처리하여 주십시오.

Waarschuwing

Er is ontploffingsgevaar indien de batterij verkeerd vervangen wordt. Vervang de batterij slechts met hetzelfde of een equivalent type die door de fabrikant aanbevolen wordt. Gebruikte batterijen dienen overeenkomstig fabrieksvoorschriften afgevoerd te worden.

Product Disposal

Warning!

Ultimate disposal of this product should be handled according to all national laws and regulations.

製品の廃棄

この製品を廃棄処分する場合、国の関係する全ての法律・条例に従い処理する必要があります。

警告

本产品的废弃处理应根据所有国家的法律和规章进行。

警告

本產品的廢棄處理應根據所有國家的法律和規章進行。

Warnung

Die Entsorgung dieses Produkts sollte gemäß allen Bestimmungen und Gesetzen des Landes erfolgen.

¡Advertencia!

Al deshacerse por completo de este producto debe seguir todas las leyes y reglamentos nacionales.

Attention

La mise au rebut ou le recyclage de ce produit sont généralement soumis à des lois et/ou directives de respect de l'environnement. Renseignez-vous auprès de l'organisme compétent.

סילוק המוצר

אזהרה !

סילוק סופי של מוצר זה חייב להיות בהתאם להנחיות וחוקי המדינה.

عند التخلص النهائي من هذا المنتج ينبغي التعامل معه وفقا لجميع القوانين واللوائح الوطنية

경고!

이 제품은 해당 국가의 관련 법규 및 규정에 따라 폐기되어야 합니다.

Waarschuwing

De uiteindelijke verwijdering van dit product dient te geschieden in overeenstemming met alle nationale wetten en reglementen.

2-2 Static-Sensitive Devices

Electrostatic Discharge (ESD) can damage electronic components. To avoid damaging your system board, it is important to handle it very carefully. The following measures are generally sufficient to protect your equipment from ESD.

Precautions

- Use a grounded wrist strap designed to prevent static discharge.
- Touch a grounded metal object before removing the board from the antistatic bag.
- Handle the motherboard by its edges only; do not touch its components, peripheral chips, memory modules or gold contacts.
- When handling chips or modules, avoid touching their pins.
- Put the motherboard and peripherals back into their antistatic bags when not in use.
- For grounding purposes, make sure that your system chassis provides excellent conductivity between the power supply, the case, the mounting fasteners and the motherboard.

Unpacking

The motherboard is shipped in antistatic packaging to avoid static damage. When unpacking the motherboard, make sure that the person handling it is static protected.

2-3 Motherboard Installation

All motherboards have standard mounting holes to fit different types of chassis. Make sure that the locations of all the mounting holes for both motherboard and chassis match. Although a chassis may have both plastic and metal mounting fasteners, metal ones are highly recommended because they ground the motherboard to the chassis. Make sure that the metal standoffs click in or are screwed in tightly. Then use a screwdriver to secure the motherboard onto the motherboard tray.

Tools Needed

- Phillips Screwdriver
- Pan head screws (11 pieces)
- Standoffs (11 pieces, if needed)

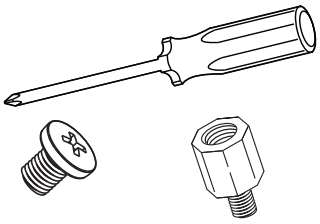

Location of Mounting Holes

There are eleven (11) mounting holes on this motherboard indicated by the arrows.

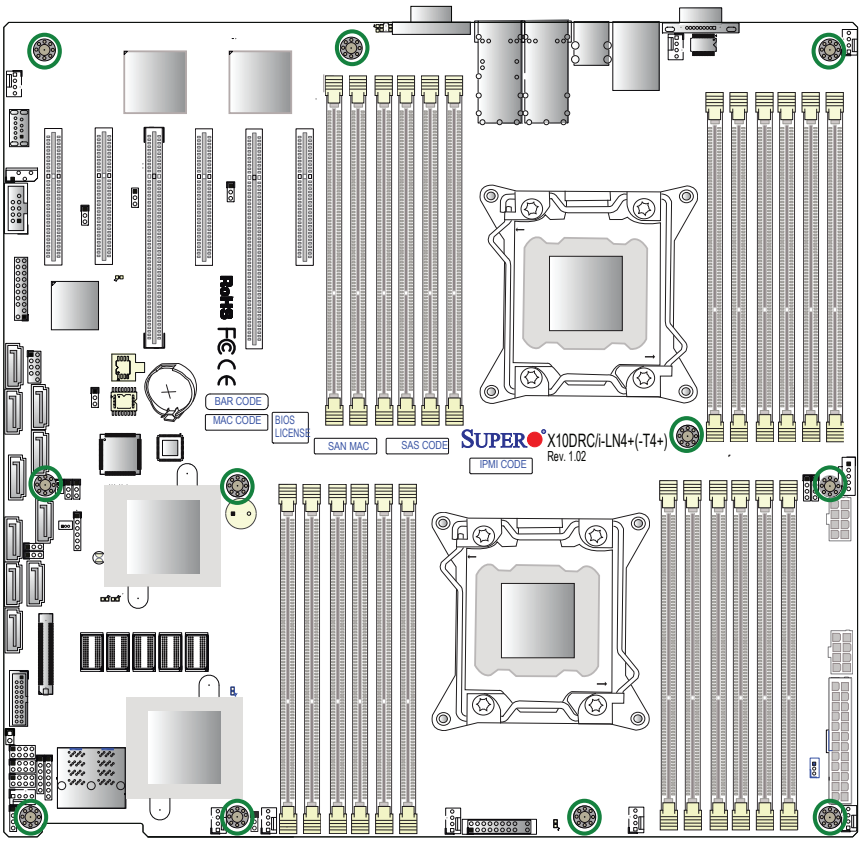

Caution: 1) To avoid damaging the motherboard and its components, please do not use a force greater than 8 lb/inch on each mounting screw during motherboard installation. 2) Some components are very close to the mounting holes. Please take precautionary measures to prevent damage to these components when installing the motherboard to the chassis.

Installing the Motherboard

Note: Always connect the power cord last, and always remove it before adding, removing or changing any hardware components.

1. Install the I/O shield into the chassis.

2. Locate the mounting holes on the motherboard.

3. Locate the matching mounting holes on the chassis. Align the mounting holes on the motherboard against the mounting holes on the chassis.

4. Install standoffs in the chassis as needed.

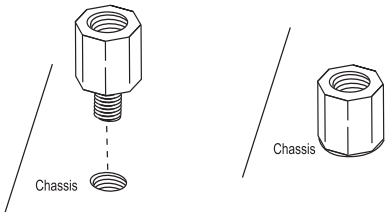

5. Install the motherboard into the chassis carefully to avoid damaging motherboard components.

6. Using the Phillips screwdriver, insert a Pan head #6 screw into a mounting hole on the motherboard and its matching mounting hole on the chassis.

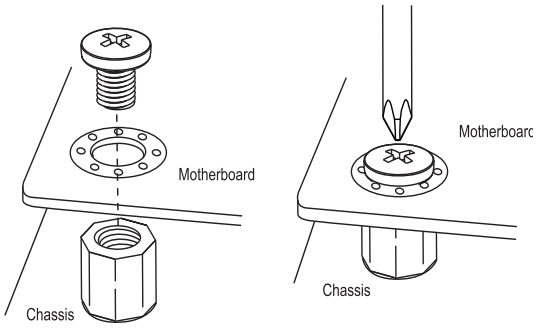

7. Repeat Step 5 to insert #6 screws into all mounting holes.

8. Make sure that the motherboard is securely placed in the chassis.

Note: Images displayed are for illustration only. Your chassis or components might look different from those shown in this manual.

2-4 Processor and Heatsink Installation

Warning: When handling the processor package, avoid placing direct pressure on the label area. Also, improper CPU installation or socket/pin misalignment can cause serious damage to the CPU or the motherboard that will require RMA repairs. Be sure to read and follow all instructions thoroughly before installing your CPU and heatsink.

Notes:

- Always connect the power cord last, and always remove it before adding, removing or changing any hardware components. Make sure that you install the processor into the CPU socket before you install the CPU heatsink.
- If you buy a CPU separately, make sure that you use an Intel-certified multi-directional heatsink only.
- Make sure to install the motherboard into the chassis before you install the CPU heatsink.
- When receiving a motherboard without a processor pre-installed, make sure that the plastic CPU socket cap is in place and none of the socket pins are bent; otherwise, contact your retailer immediately.
- Refer to the Supermicro website for updates on CPU support.

Installing the LGA2011 Processor

1. There are two load levers on the LGA2011 socket. To open the socket cover, first press and release the load lever labeled 'Open 1st'.

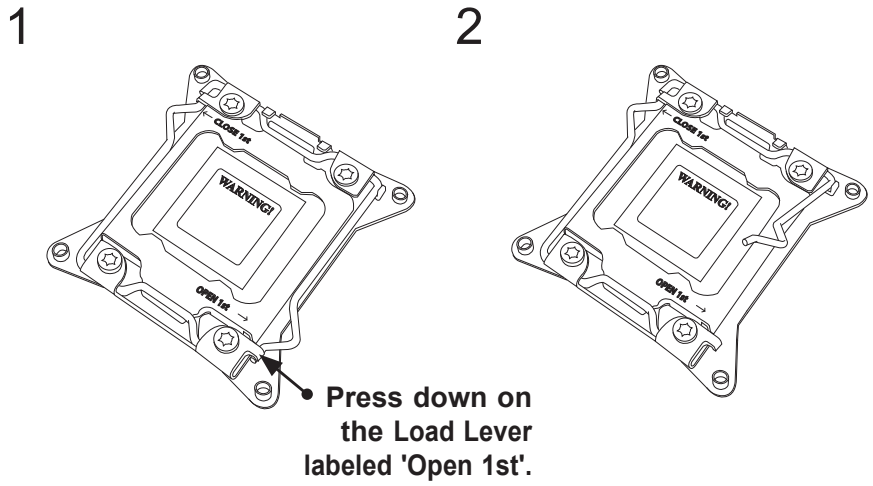

Note: All graphics, drawings and pictures shown in this manual are for illustration only. The components that came with your machine may or may not look exactly the same as those shown in this manual.

2. Press the second load lever labeled 'Close 1st' to release the load plate that covers the CPU socket from its locking position.

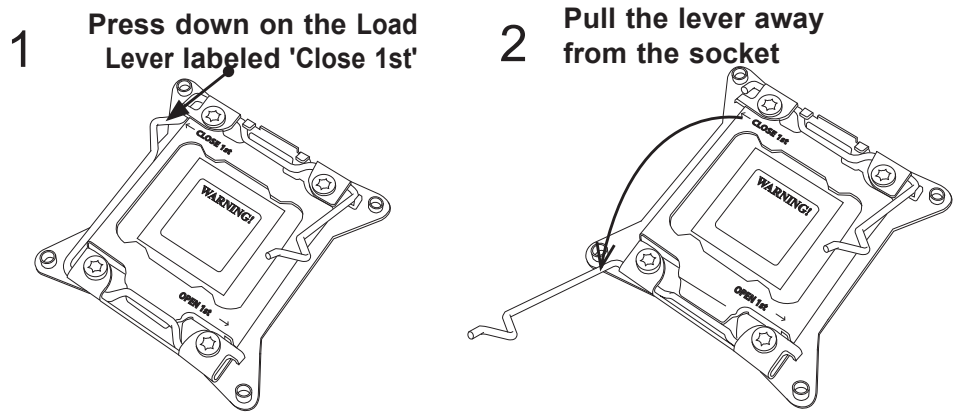

3. With the lever labelled 'Close 1st' fully retracted, gently push down on the lever labelled 'Open 1st' to open the load plate. Lift the load plate to open it completely.

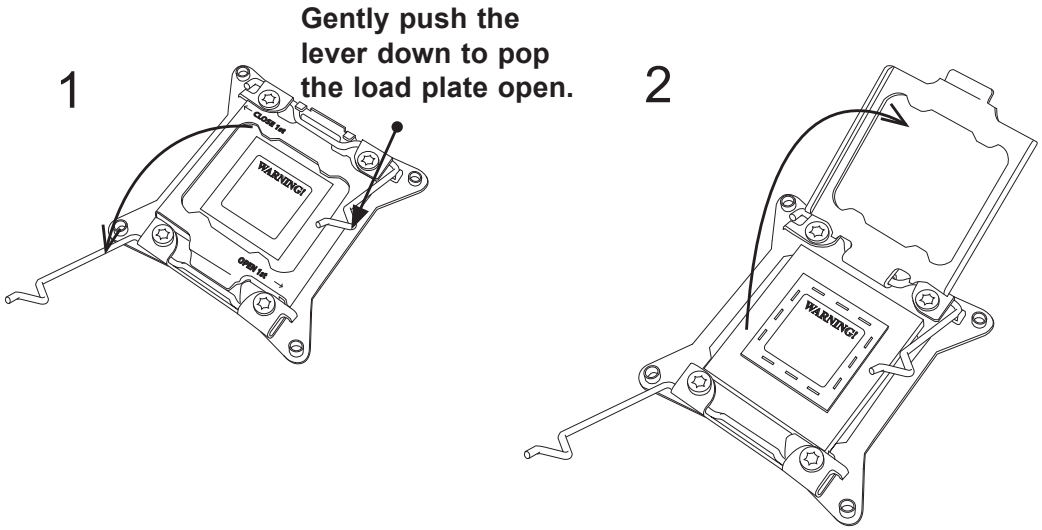

Note: All graphics, drawings and pictures shown in this manual are for illustration only. The components that came with your machine may or may not look exactly the same as those shown in this manual.

4. Use your thumb and the index finger to loosen the lever and open the load plate.

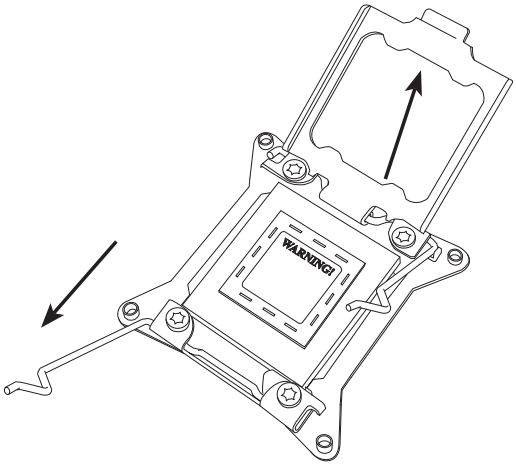

5. Using your thumb and index finger, hold the CPU on its edges. Align the CPU keys, which are semi-circle cutouts, against the socket keys.

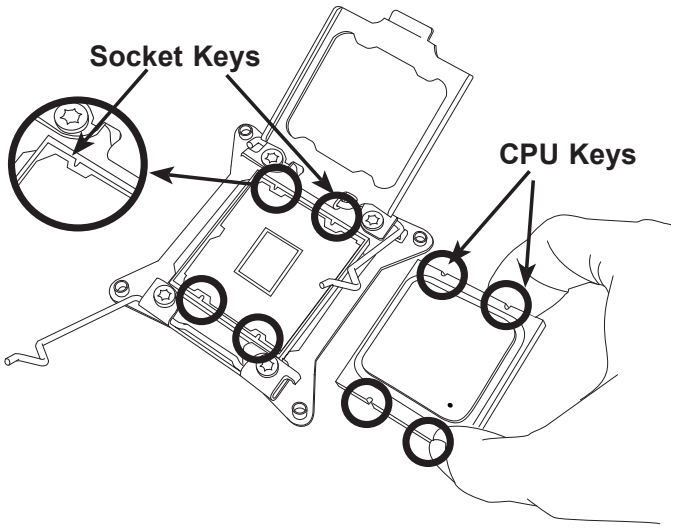

6. Once they are aligned, carefully lower the CPU straight down into the socket. (Do not drop the CPU on the socket. Do not move the CPU horizontally or vertically. Do not rub the CPU against the surface or against any pins of the socket to avoid damaging the CPU or the socket.)

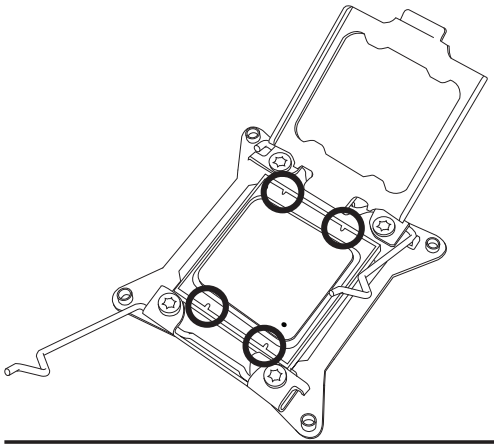

Warning: You can only install the CPU inside the socket in one direction. Make sure that it is properly inserted into the CPU socket before closing the load plate. If it doesn't close properly, do not force it as it may damage your CPU. Instead, open the load plate again to make sure that the CPU is aligned properly.

7. With the CPU inside the socket, inspect the four corners of the CPU to make sure that the CPU is properly installed.

1 **Gently close the load plate.**

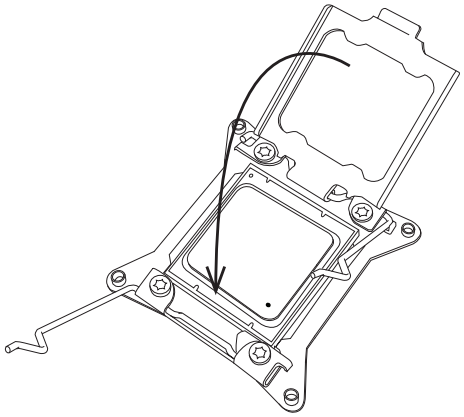

2 **Push down and lock the lever labeled 'Close 1st'.**

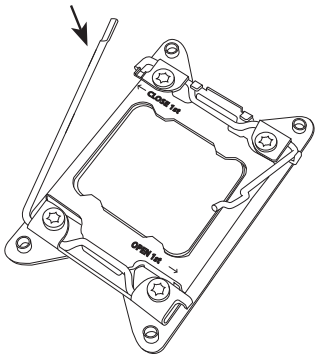

8. Close the load plate with the CPU inside the socket. Lock the lever labelled 'Close 1st' first, then lock the lever labelled 'Open 1st' second. Using your thumb gently push the load levers down to the lever locks.

3

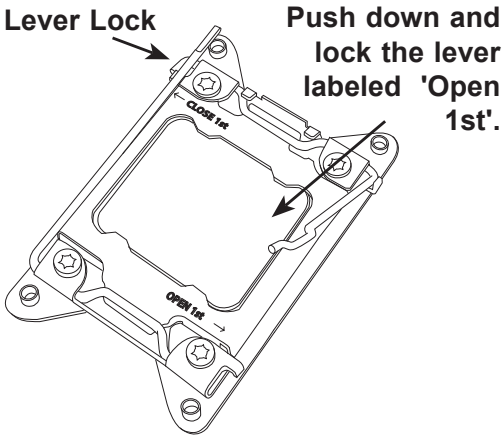

4

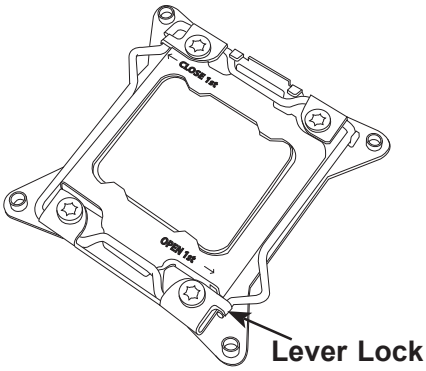

Installing a Passive CPU Heatsink

1. Do not apply any thermal grease to the heatsink or the CPU die -- the required amount has already been applied.

2. Place the heatsink on top of the CPU so that the four mounting holes are aligned with those on the Motherboard and the Heatsink Bracket underneath.

3. Screw in two diagonal screws (i.e., the #1 and the #2 screws) until just snug (-do not over-tighten the screws to avoid possible damage to the CPU.)

4. Finish the installation by fully tightening all four screws.

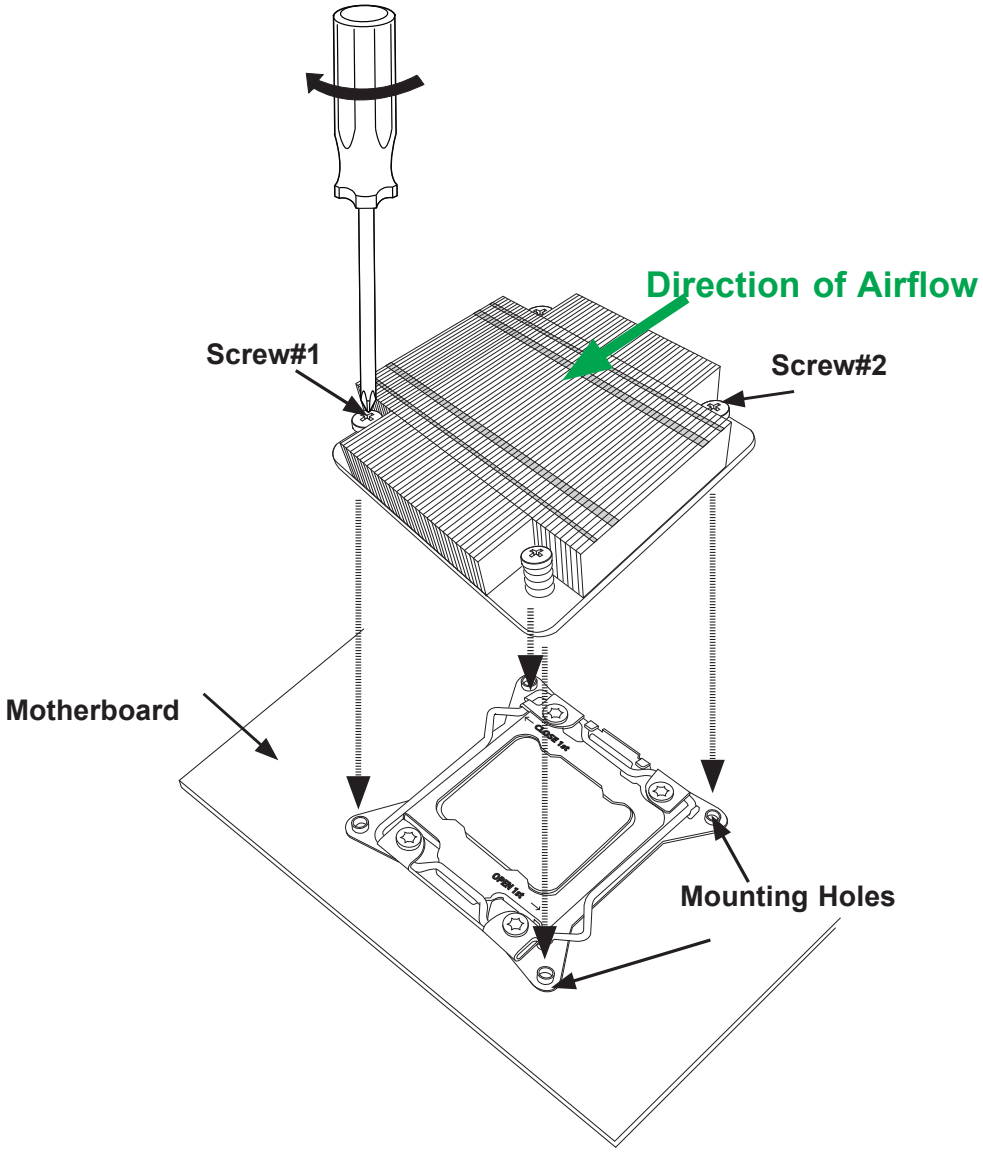

Note: For optimized airflow, please follow your chassis airflow direction to properly install the heatsink. Graphics and drawings included in this manual are for reference only. They might look different from the components installed in your system.

Removing the Heatsink

Warning: We do not recommend that the CPU or the heatsink be removed. However, if you do need to uninstall the heatsink, please follow the instructions below to uninstall the heatsink to avoid damaging the CPU or the CPU socket.

1. Unscrew the heatsink screws from the motherboard in the sequence as shown in the illustration below.

2. Gently wriggle the heatsink to loosen it from the CPU. (Do not use excessive force when wriggling the heatsink!)

3. Once the heatsink is loosened from the socket, remove the heatsink from the CPU socket.

4. Remove the used thermal grease and clean the surface of the CPU and the heatsink, Reapply the proper amount of thermal grease on the surface before reinstalling the CPU and the heatsink.

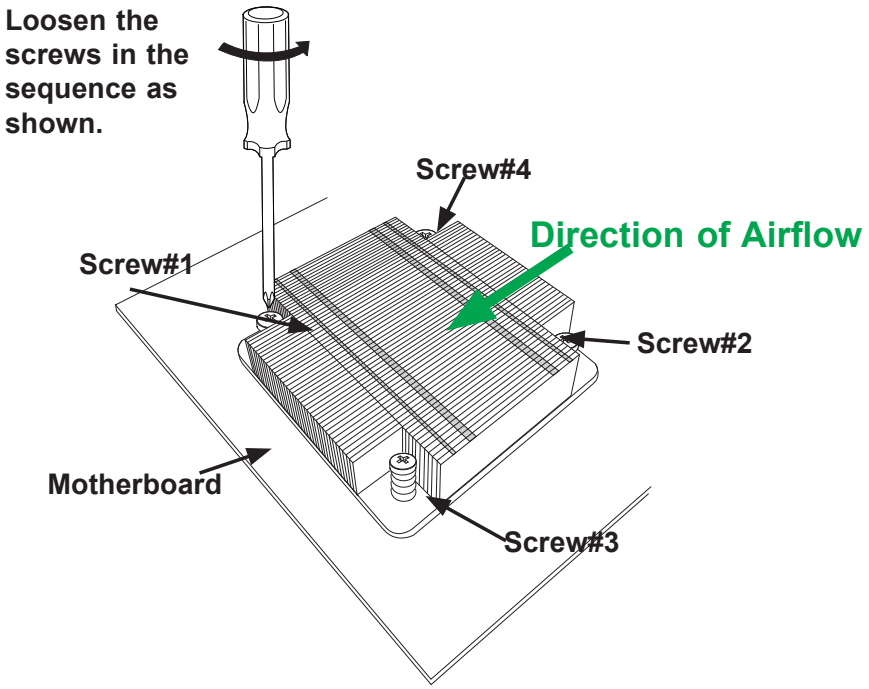

Note: For optimized airflow, please follow your chassis airflow direction to properly install the heatsink. Graphics and drawings included in this manual are for reference only. They might look different from the components installed in your system.

2-5 Installing and Removing the Memory Modules

Note: Check Supermicro's website for recommended memory modules.

CAUTION

Exercise extreme care when installing or removing DIMM modules to prevent any possible damage.

Installing & Removing DIMMs

1. Insert the desired number of DIMMs into the memory slots, starting with P1-DIMM A1. (For best performance, please use the memory modules of the same type and speed in the same bank.)

2. Push the release tabs outwards on both ends of the DIMM slot to unlock it.

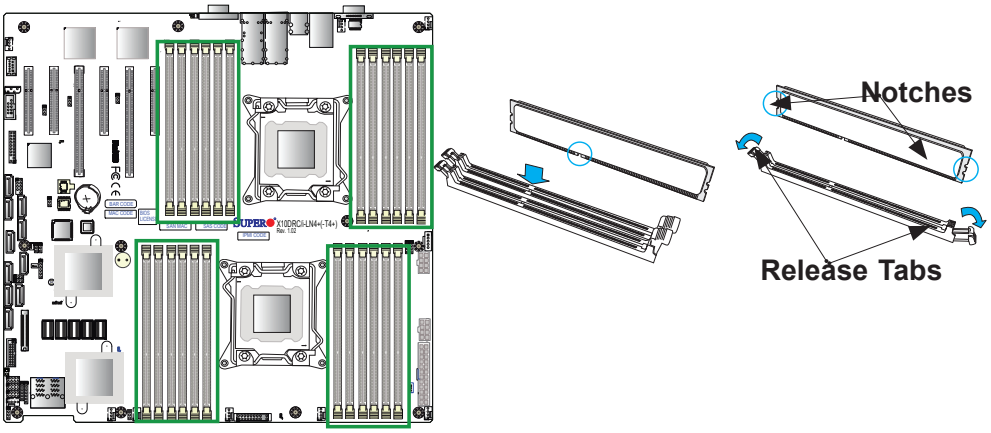

3. Align the key of the DIMM module with the receptive point on the memory slot.

4. Align the notches on both ends of the module against the receptive points on the ends of the slot.

5. Use two thumbs together to press the notches on both ends of the module straight down into the slot until the module snaps into place.

6. Press the release tabs to the locking positions to secure the DIMM module into the slot.

Press both notches straight down into the memory slot at the same time.

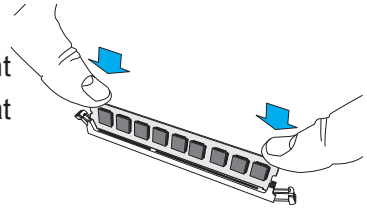

Removing Memory Modules

Press both notches on the ends of the DIMM module to unlock it. Once the DIMM module is loosened, remove it from the memory slot.

Memory Support for the X10DRC/i-LN4+/-T4+ Motherboard

The X10DRC/i-LN4+/-T4+ motherboard supports up to 1536 GB of Load Reduced (LRDIMM) or up to 768 GB of Registered (RDIMM) DDR4 (288-pin) ECC modules 2400/2133/1866/1600 MHz in 24 slots. Memory speed support is pending on the CPUs installed in your system. For the latest memory updates, please refer to our website a at http://www.supermicro.com/products/motherboard.

Processor & Memory Module Population Configuration

For memory to work properly, follow the tables below for memory installation.

Processors and their Corresponding Memory Modules												
CPU#	**Corresponding DIMM Modules**											
CPU1	**P1-DIMMA1~P1-DIMMD3**											
P1-DIMM-	A1	B1	C1	D1	A2	B2	C2	D2	A3	B3	C3	D3
CPU2	**P2-DIMME1~P1-DIMMH3**											
P2-DIMM-	E1	F1	G1	H1	E2	F2	G2	H2	E3	F3	G3	H3

Processor and Memory Module Population for Optimal Performance	
Number of CPUs+DIMMs	**CPU and Memory Population Configuration Table (For memory to work properly, please follow the instructions below.)**
1 CPU & 2 DIMMs	CPU1 P1-DIMMA1/P1-DIMMB1
1 CPU & 4 DIMMs	CPU1 P1-DIMMA1/P1-DIMMB1, P1-DIMMC1/P1-DIMMD1
1 CPU & 5~8 DIMMs	CPU1 P1-DIMMA1/P1-DIMMB1, P1-DIMMC1/P1-DIMMD1 + Any memory pairs in P1-DIMMA2/P1-DIMMB2/P1-DIMMC2/P1-DIMMD2 slots
2 CPUs & 4 DIMMs	CPU1 + CPU2 P1-DIMMA1/P1-DIMMB1, P2-DIMME1/P2-DIMMF1
2 CPUs & 6 DIMMs	CPU1 + CPU2 P1-DIMMA1/P1-DIMMB1/P1-DIMMC1/P1-DIMMD1, P2-DIMME1/P2-DIMMF1
2 CPUs & 8 DIMMs	CPU1 + CPU2 P1-DIMMA1/P1-DIMMB1/P1-DIMMC1/P1-DIMMD1, P2-DIMME1/P2-DIMMF1/P2-DIMMG1/P2-DIMMH1
2 CPUs & 9~16 DIMMs	CPU1/CPU2 P1-DIMMA1/P1-DIMMB1/P1-DIMMC1/P1-DIMMD1, P2-DIMME1/P2-DIMMF1/P2-DIMMG1/P2-DIMMH1 + Any memory pairs in P1, P2 DIMM slots
2 CPUs & 16 DIMMs	CPU1/CPU2 P1-DIMMA1/P1-DIMMB1/P1-DIMMC1/P1-DIMMD1, P2-DIMME1/P2-DIMMF1/P2-DIMMG1/P2-DIMMH1,P1-DIMMA2/P1-DIMMB2/P1-DIMMC2/P1-DIMMD2, P2-DIMME2/P2-DIMMF2/P2-DIMMG2/P2-DIMMH2
2 CPUs & 16~24 DIMMs	CPU1/CPU2 P1-DIMMA1/P1-DIMMB1/P1-DIMMC1/P1-DIMMD1, P2-DIMME1/P2-DIMMF1/P2-DIMMG1/P2-DIMMH1, P1-DIMMA2/P1-DIMMB2/P1-DIMMC2/P1-DIMMD2, P2-DIMME2/P2-DIMMF2/P2-DIMMG2/P2-DIMMH2, P1-DIMMA3/P1-DIMMB3/P1-DIMMC3/P1-DIMMD3, P2-DIMME3/P2-DIMMF3/P2-DIMMG3/P2-DIMMH3

Populating DDR4 DIMM Modules for the E5-2600 v3-based Platform

Type	Ranks Per DIMM and Data Width	DIMM Capacity (GB)		Speed (MT/s); Voltage (V); Slot Per Channel (SPC) and DIMM Per Channel (DPC)		
				3 Slots Per Channel		
				1DPC	2DPC	3DPC
		4Gb	8Gb	1.2V	1.2V	1.2V
RDIMM	SRx4	8GB	16GB	2133	1866	1600
RDIMM	SRx8	4GB	8GB	2133	1866	1600
RDIMM	DRx8	8GB	16GB	2133	1866	1600
RDIMM	DRx4	16GB	32GB	2133	1866	1600
LRDIMM	QRx4	32GB	64GB	2133	2133	1600
LRDIMM 3DS†	8Rx4	64GB	128GB	2133	2133	1600

Populating DDR4 DIMM Modules for the E5-2600 v4-based Platform

Type	Ranks Per DIMM and Data Width	DIMM Capacity (GB)		Speed (MT/s); Voltage (V); Slot Per Channel (SPC) and DIMM Per Channel (DPC)		
				3 Slots Per Channel		
				1DPC	2DPC	3DPC
		4Gb	8Gb	1.2V	1.2V	1.2V
RDIMM	SRx4	8GB	16GB	2400	2133	1600
RDIMM	SRx8	4GB	8GB	2400	2133	1600
RDIMM	DRx8	8GB	16GB	2400	2133	1600
RDIMM	DRx4	16GB	32GB	2400	2133	1600
LRDIMM	QRx4	32GB	64GB	2400	2400	1866
LRDIMM 3DS	8Rx4	64GB	128GB	2400	2400	1866

2-6 Control Panel Connectors and I/O Ports

The I/O ports are color coded in conformance with the industry standards. See the picture below for the colors and locations of the various I/O ports.

Back Panel Connectors and I/O Ports

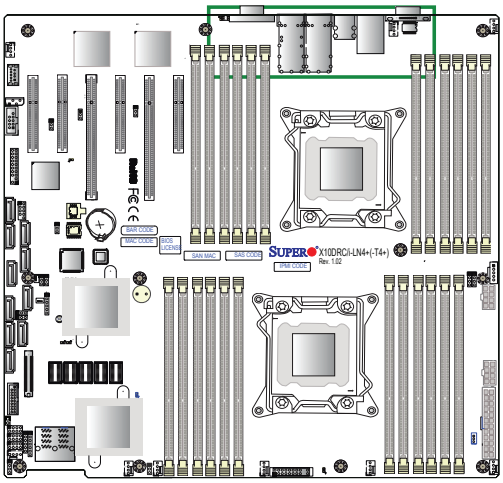

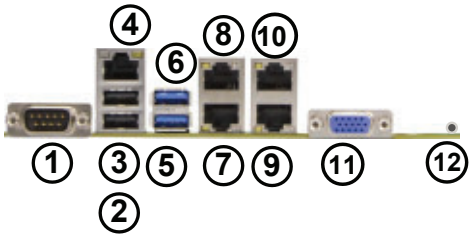

Back Panel I/O Port Locations and Definitions

1. COM Port 1 (Turquoise)
2. Back Panel USB Port 0 (2.0)
3. Back Panel USB Port 1 (2.0)
4. IPMI_Dedicated LAN
5. Back Panel USB Port 4 (3.0)
6. Back Panel USB Port 5 (3.0)
7. GLAN 1 (X10DRC/i-LN4+), 10G-LAN (TLAN) 1 (X10DRC/i-T4+)
8. GLAN 2 (X10DRC/i-LN4+), 10G-LAN (TLAN) 2 (X10DRC/i-T4+)
9. GLAN 3 (X10DRC/i-LN4+), 10G-LAN (TLAN) 3 (X10DRC/i-T4+)
10. GLAN 4 (X10DRC/i-LN4+), 10G-LAN (TLAN) 4 (X10DRC/i-T4+)
11. Back Panel VGA (Blue)
12. UID Button/UID LED (LE1)

Serial Ports

Two COM connections (COM1 & COM2) are located on the motherboard. COM1 is located on the Backplane I/O panel. COM2, located next to CPU2 PCI-E Slot1, provides front access support. See the table on the right for pin definitions.

Serial COM) Ports Pin Definitions			
Pin #	Definition	Pin #	Definition
1	DCD	6	DSR
2	RXD	7	RTS
3	TXD	8	CTS
4	DTR	9	RI
5	Ground	10	N/A

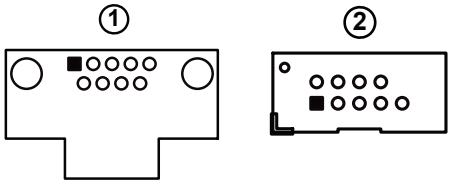

Video Connection

A Video (VGA) port is located next to LAN Ports 3/4 on the I/O backplane. Refer to the board layout below for the location.

1. COM1
2. COM2
3. VGA

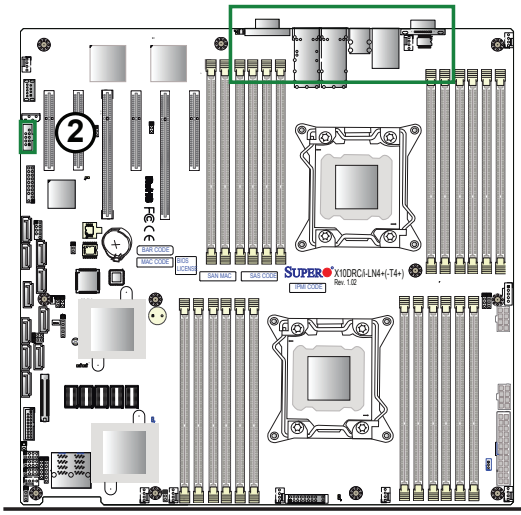

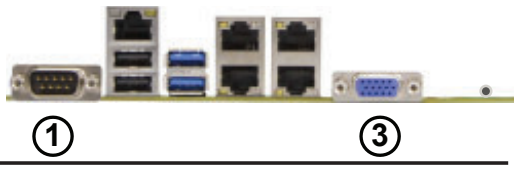

Universal Serial Bus (USB)

Two USB 2.0 ports (USB 0/1) and two USB 3.0 ports (USB 4/5), located on the I/O backpanel, provide backpanel USB support. In addition, two USB 3.0 headers, located on the motherboard, provide three front accessible USB 3.0 connections (USB 7/8, USB6). A USB 2.0 header is also located on the motherboard to provide two USB 2.0 connections (USB 2/3) for front access support. (Cables are not included). See the tables on the right for pin definitions.

Back Panel USB (2.0) 0/1, 2/3 Pin Definitions

Pin#	Definition	Pin#	Definition
1	+5V	5	+5V
2	USB_PN1	6	USB_PN0
3	USB_PP1	7	USB_PP0
4	Ground	8	Ground

USB (3.0) USB 4/5, 7/8, 6 Pin Definitions

Pin#	Description
1	VBUS
2	SSRX-
3	SSRX+
4	Ground
5	SSTX-
6	SSTX+
7	GND_DRAIN
8	D-
9	D+

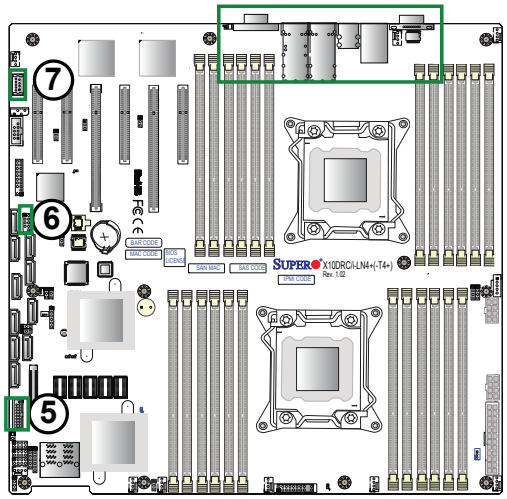

1. Backpanel USB0 (USB 2.0)
2. Backpanel USB1 (USB 2.0)
3. Backpanel USB4 (USB 3.0)
4. Backpanel USB5 (USB 3.0)
5. FP USB 7/8 (USB3.0)
6. FP USB 2/3 (USB2.0)
7. FP USB 6 (USB 3.0)

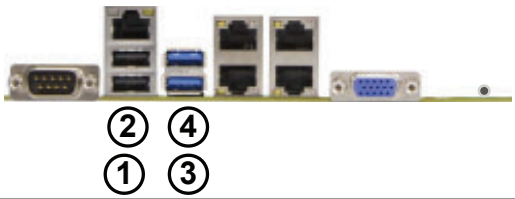

GLAN/10G-LAN (TLAN) Ports & IPMI_LAN Port

Four Ethernet ports (LAN1/2, LAN3/4) are located on the I/O backplane on the motherboard. These Ethernet ports support Gigabit LANs on the X10DRC/i-LN4+ and support 10G-LANs on the X10DRC/i-T4+. In addition, an IPMI_LAN, located above USB 0/1 ports, can be used for IPMI SOL (Serial-over LAN) support. All these ports accept RJ45 type cables. Please refer to the LED Indicator Section for LAN LED information.

GLAN/TLAN Ports Pin Definition

Pin#	Definition	Pin#	Definition
A1	TDR1+	A10	TDR4+
A3	TRCT1	A12	TRCT4
A2	TDR1-	A11	TDR4-
A4	TDR2+-	A13	IET+
A6	TRCT2	A14	IET-
A5	TDR2--	A15	YEL+
A7	TDR3+	A16	YEL-
A9	TRCT3	A17	ORG-/GRE+
A8	TDR3-	A18	ORG+/GRE-

IPMI LAN Port Pin Definition

Pin#	Definition	Pin#	Definition
11	TX1-	20	YEL+
10	TX1+	19	YEL-
13	TX2-	22	ORG-/GRN+
12	TX2+-	21	ORG+/GRN-
15	TX3-	23	SGND
14	TX3+	24	SGND
17	TX4-	25	SGND
16	TX4+	26	SGND
9	VCC		
18	GND		

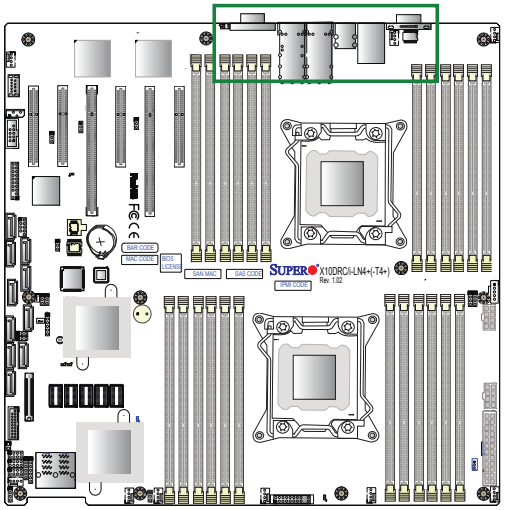

1. GLAN1 (for -LN4+),10-GLAN1 (for -T4+)
2. GLAN2 (for -LN4+), 10-GLAN2 (for -T4+)
3. GLAN3 (for -LN4+),10-GLAN3 (for -T4+)
4. GLAN4 (for -LN4+),10-GLAN4 (for -T4+)
5. IPMI_LAN

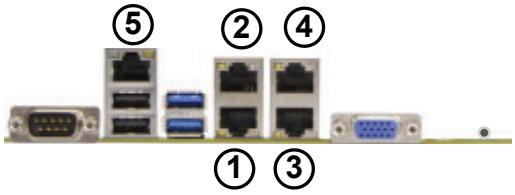

Unit Identifier Switch/UID LED Indicator

A rear Unit Identifier (UID) switch and a rear UID LED is located on the IO back panel. The front UID is located on pin 13 on the Front Panel Control (JF1), and the front UID LED is located on pin 7 on JF1. When you press the front or rear UID switch, both front and rear UID LEDs will be turned on. Press the UID switch again to turn off the LED indicators. The UID Indicators provide easy identification of a system unit that may be in need of service.

Note: UID can also be triggered via IPMI on the motherboard. For more information on IPMI, please refer to the IPMI User's Guide posted on our website @http://www.super-micro.com.

UID Switch	
Pin#	Definition
1	Ground
2	Ground
3+4	Button In

UID LED Status	
Color/State	Status
Blue: On	Unit Identified

1. UID Button
2. Rear UID LED
3. Front UID LED
4. Front UID Switch

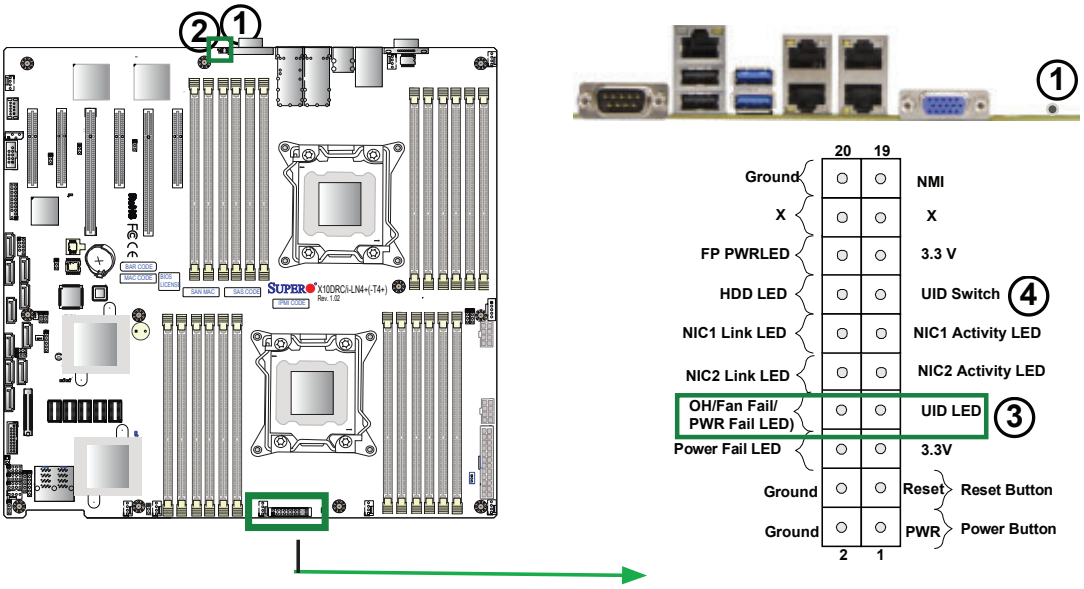

Front Control Panel

JF1 contains header pins for various buttons and indicators that are normally located on a control panel at the front of the chassis. These connectors are designed specifically for use with Supermicro's server chassis. See the figure below for the descriptions of the various control panel buttons and LED indicators. Refer to the following section for descriptions and pin definitions.

JF1 Header Pins

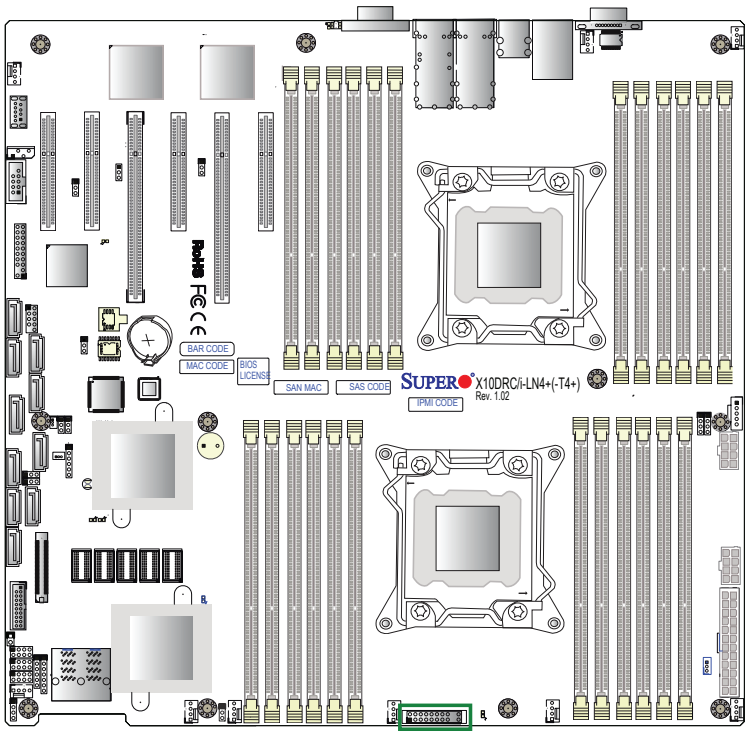

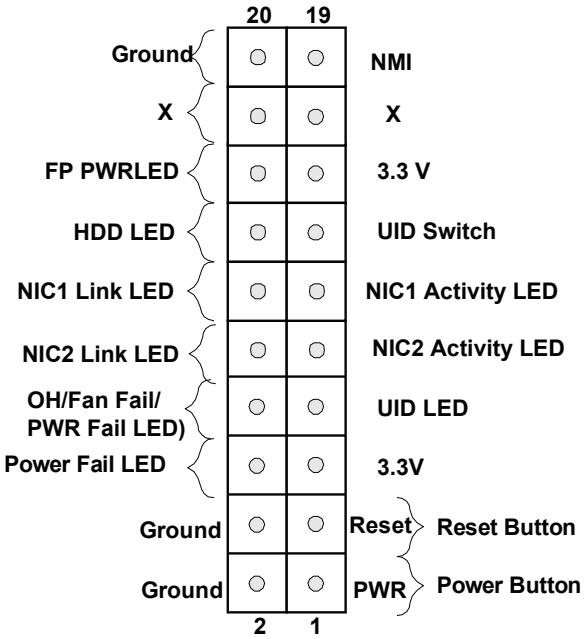

Front Control Panel Pin Definitions

NMI Button

The non-maskable interrupt button header is located on pins 19 and 20 of JF1. Refer to the table on the right for pin definitions.

NMI Button Pin Definitions (JF1)	
Pin#	Definition
19	Control
20	Ground

Power LED

The Power LED connection is located on pins 15 and 16 of JF1. Refer to the table on the right for pin definitions.

Power LED Pin Definitions (JF1)	
Pin#	Definition
15	3.3V
16	PWR LED

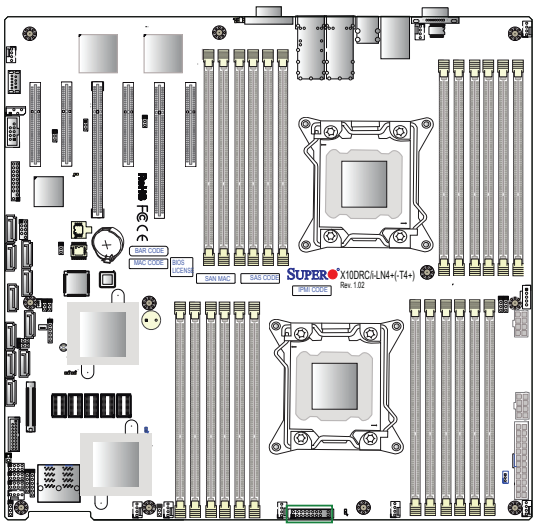

A. NMI

B. PWR LED

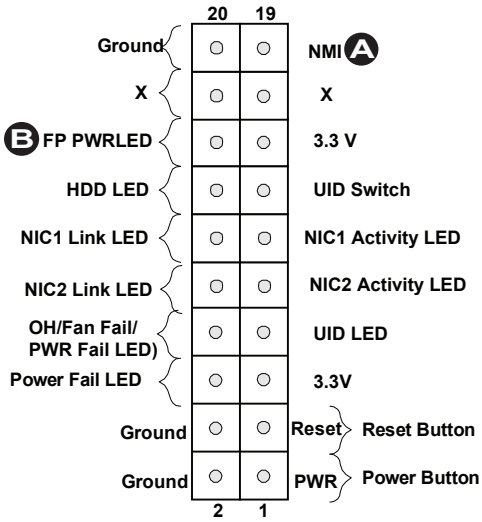

HDD/UID LED

The HDD LED connection is located on pins 13 and 14 of JF1. Attach a cable to pin 14 to show HDD activity status. Attach a cable to pin 13 to use UID switch. See the table on the right for pin definitions.

HDD LED Pin Definitions (JF1)	
Pin#	Definition
13	UID Switch
14	HD Active

NIC1/NIC2 LED Indicators

The NIC (Network Interface Controller) LED connection for LAN port 1 is located on pins 11 and 12 of JF1, and the LED connection for LAN Port 2 is on pins 9 and 10. Attach the NIC LED cables here to display network activity. Refer to the table on the right for pin definitions.

GLAN1/2 LED Pin Definitions (JF1)	
Pin#	Definition
9	NIC 2 Activity LED
10	NIC 2 Link LED
11	NIC 1 Activity LED
12	NIC 1 Link LED

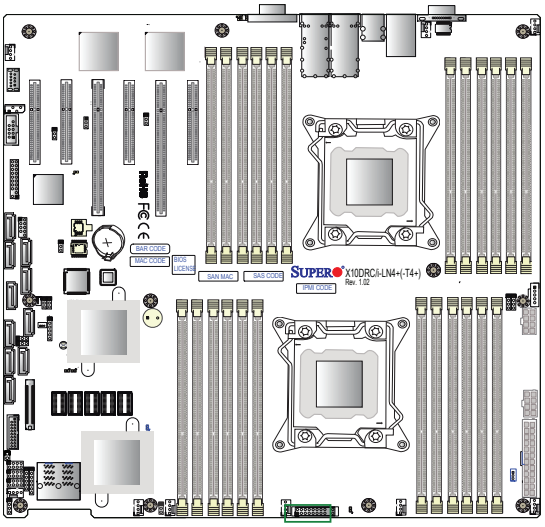

A. HDD/UUID Switch

B. NIC1 LED

C. NIC2 LED

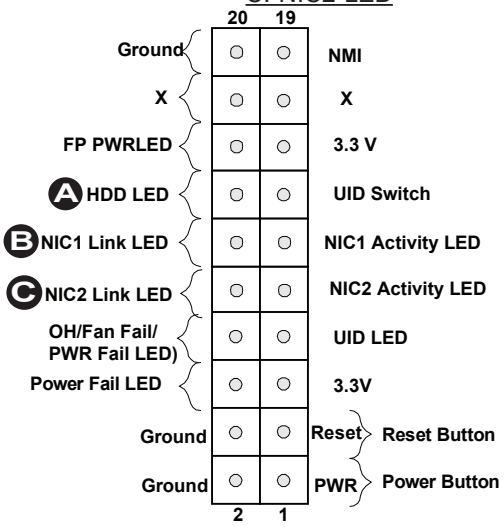

Overheat (OH)/Fan Fail/PWR Fail/ UID LED

Connect an LED cable to pins 7 and 8 of the front control panel to use the Overheat/Fan Fail/Power Fail and UID LED connections. The red LED on pin 8 provides warnings of overheat, fan failure or power failure. The blue LED on pin 7 works as the front panel UID LED indicator. Refer to the table on the right for pin definitions.

OH/Fan Fail/ PWR Fail/Blue_UID LED Pin Definitions (JF1)

Pin#	Definition
7	Blue_UID LED
8	OH/Fan Fail/Power Fail

OH/Fan Fail/PWR Fail LED Status (Red LED)

State	Definition
Off	Normal
On	Overheat
Flashing	Fan Fail

Power Fail LED

The Power Fail LED connection is located on pins 5 and 6 of JF1. Refer to the table on the right for pin definitions.

PWR Fail LED Pin Definitions (JF1)

Pin#	Definition
5	3.3V
6	PWR Supply Fail

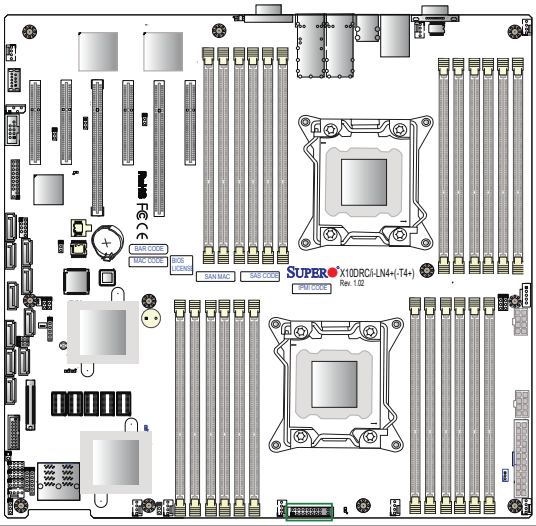

A. OH/Fail/PWR Fail LED

B. PWR Supply Fail

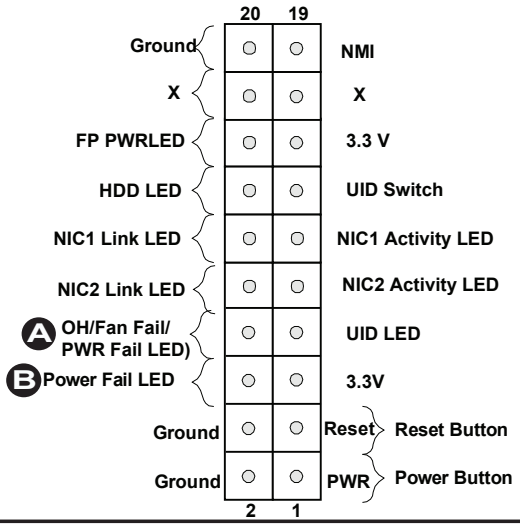

Reset Button

The Reset Button connection is located on pins 3 and 4 of JF1. Attach it to a hardware reset switch on the computer case. Refer to the table on the right for pin definitions.

Reset Button Pin Definitions (JF1)	
Pin#	Definition
3	Reset
4	Ground

Power Button

The Power Button connection is located on pins 1 and 2 of JF1. Momentarily contacting both pins will power on/off the system. To turn off the power when the system is on, press the button for 4 seconds or longer. Refer to the table on the right for pin definitions.

Power Button Pin Definitions (JF1)	
Pin#	Definition
1	Signal
2	Ground

A. Reset Button

B. PWR Button

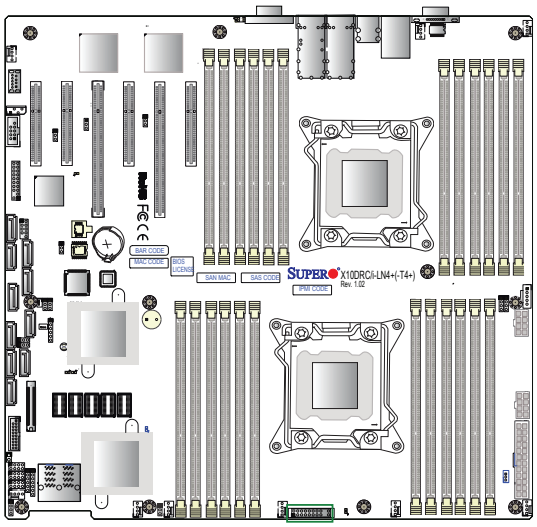

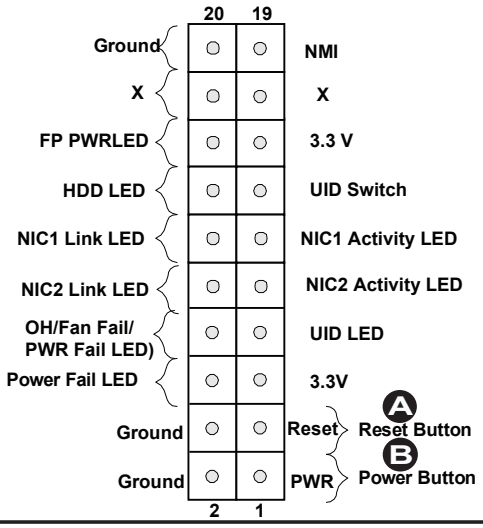

2-7 Connecting Cables

Power Connectors

A 24-pin main power supply connector (J24), and two 8-pin CPU power connectors (JPWR1/JPWR2) are located on the motherboard. These power connectors meet the SSI EPS 12V specification and must be connected to your power supply to provide adequate power to the system. See the tables on the right for pin definitions.

Warning: To provide adequate power supply to the motherboard, be sure to connect the 24-pin ATX PWR (J24) and the *two* 8-pin power connectors (JPWR1, JPWR2) to the power supply. Failure to do so may void the manufacturer warranty on your power supply and motherboard.

ATX Power 24-pin Connector Pin Definitions (JPW1)

Pin#	Definition	Pin #	Definition
13	+3.3V	1	+3.3V
14	-12V (NC)	2	+3.3V
15	COM	3	COM
16	PS_ON	4	+5V
17	COM	5	COM
18	COM	6	+5V
19	COM	7	COM
20	Res (NC)	8	PWR_OK
21	+5V	9	5VSB
22	+5V	10	+12V
23	+5V	11	+12V
24	COM	12	+3.3V

12V 8-pin Power Connector Pin Definitions

Pins	Definition
1 through 4	Ground
5 through 8	+12V

(Required)

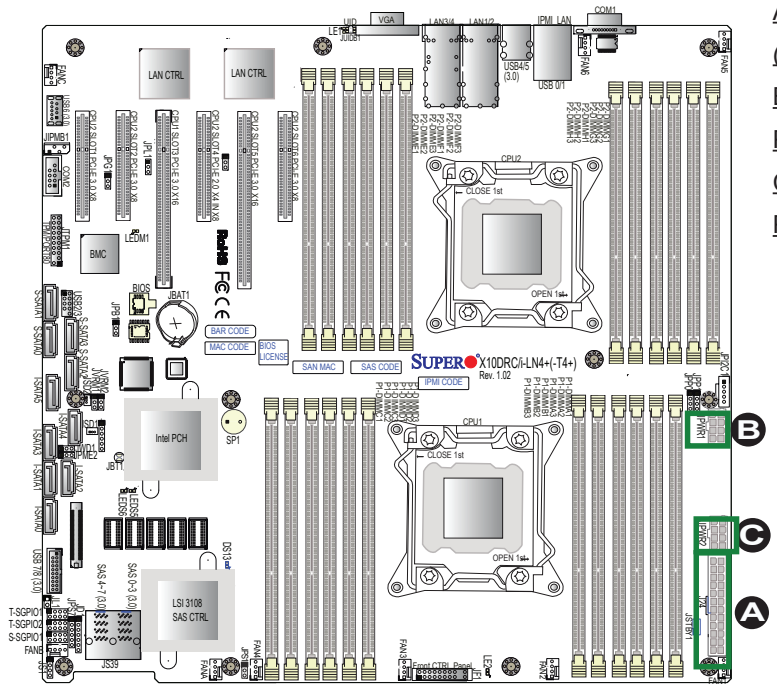

A. J24: 24-pin ATX PWR (Req'd)

B. JPWR1: 8-pin Processor PWR (Req'd)

C. JPWR2: 8-pin Processor PWR (Req'd)

Fan Headers

This motherboard has nine system/CPU fan headers (Fan 1-Fan 6, Fan A-Fan C) on the motherboard. All these 4-pin fans headers are backward compatible with the traditional 3-pin fans. However, fan speed control is available for 4-pin fans only. The fan speeds are controlled by Thermal Management via IPMI 2.0 interface. See the table on the right for pin definitions.

Fan Header Pin Definitions	
Pin#	Definition
1	Ground
2	+12V
3	Tachometer
4	PWR Modulation

Chassis Intrusion

A Chassis Intrusion header is located at JL1 on the motherboard. Attach an appropriate cable from the chassis to inform you of a chassis intrusion when the chassis is opened.

Chassis Intrusion Pin Definitions	
Pin#	Definition
1	Intrusion Input
2	Ground

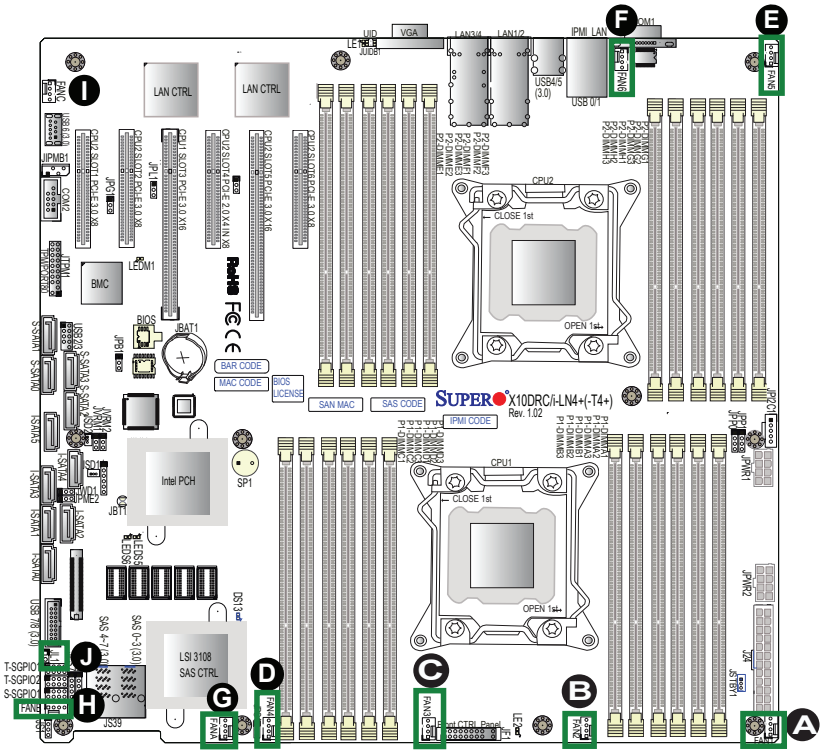

A. Fan 1
B. Fan 2
C. Fan 3
D. Fan 4
E. Fan 5
F. Fan 6
G. Fan A
H. Fan B
I. Fan C
J. Chassis Intrusion

Internal Speaker

The Internal Speaker (SP1) can be used to provide audible indications for various beep codes. See the table on the right for pin definitions.

Internal Buzzer Pin Definition		
Pin#		Definitions
Pin 1	Pos. (+)	Beep In
Pin 2	Neg. (-)	Alarm Speaker

DOM Power Connectors

Two power connectors for SATA DOM (Disk_On_Module) devices are located at JSD1/JSD2. Connect appropriate cables here to provide power support for your Serial-Link DOM devices.

DOM PWR Pin Definitions	
Pin#	Definition
1	+5V
2	Ground
3	Ground

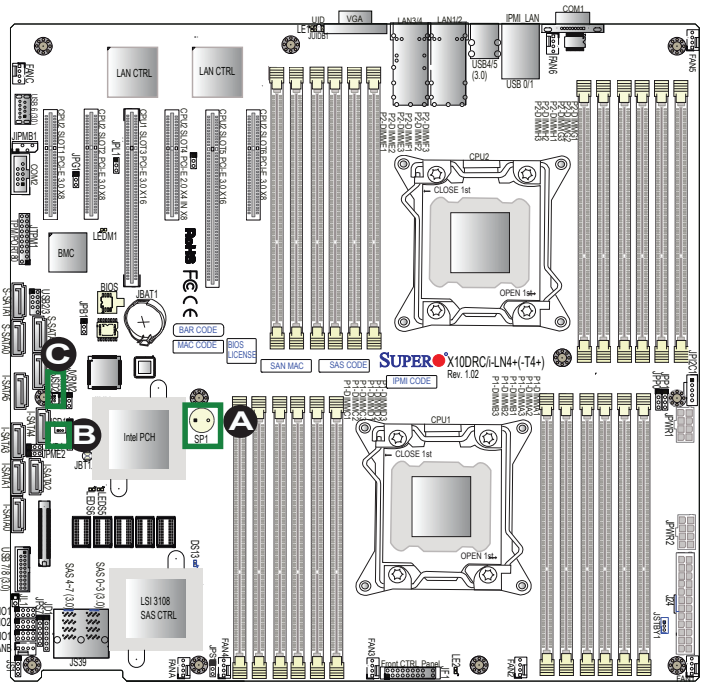

A. Internal Speaker (Buzzer)

B. SATA DOM PWR (JSCD1)

C. SATA DOM PWR (JSCD2)

TPM/Port 80 Header

A Trusted Platform Module/Port 80 header is located at JTPM1 to provide TPM support and Port 80 connection. Use this header to enhance system performance and data security. See the table on the right for pin definitions.

TPM/Port 80 Header Pin Definitions

Pin #	Definition	Pin #	Definition
1	LCLK	2	GND
3	LFRAME#	4	<(KEY)>
5	LRESET#	6	+5V (X)
7	LAD 3	8	LAD 2
9	+3.3V	10	LAD1
11	LAD0	12	GND
13	SMB_CLK4	14	SMB_DAT4
15	+3V_DUAL	16	SERIRQ
17	GND	18	CLKRUN# (X)
19	LPCPD#	20	LDRQ# (X)

Standby Power Header

The +5V Standby Power header is located at JSTBY1 on the motherboard. See the table on the right for pin definitions. (You must also have a card with a Standby Power connector and a cable to use this feature.)

Standby PWR Pin Definitions

Pin#	Definition
1	+5V Standby
2	Ground
3	No Connection

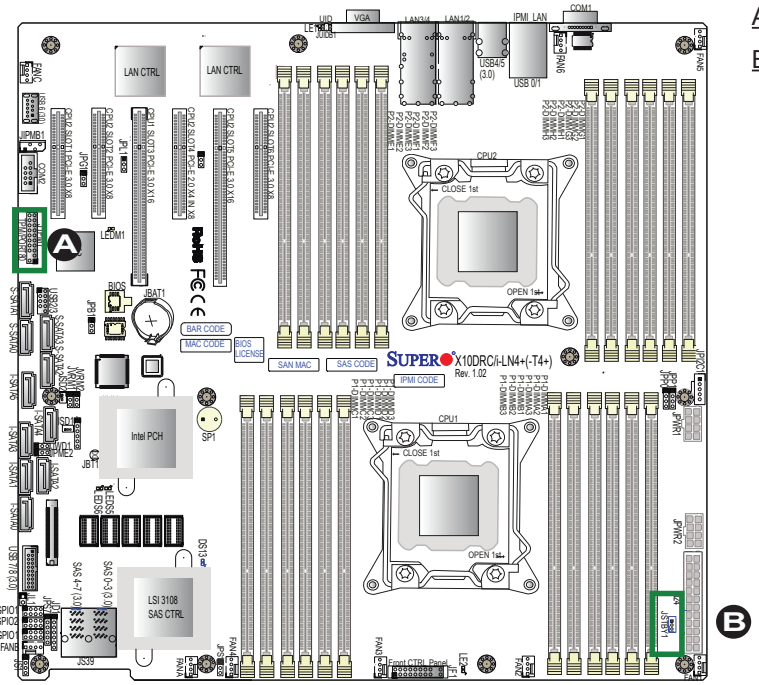

A. TPM/Port 80 Header

B. Standby PWR

Power SMB (I²C) Connector

Power System Management Bus (I²C) connector (JPI²C1) monitors power supply, fan and system temperatures. See the table on the right for pin definitions.

PWR SMB Pin Definitions	
Pin#	Definition
1	Clock
2	Data
3	PMBUS_Alert
4	Ground
5	+3.3V

IPMB

A System Management Bus header for IPMI 2.0 is located at JIPMB1. Connect an appropriate cable here to use the IPMB I²C connection on your system.

IPMB Header Pin Definitions	
Pin#	Definition
1	Data
2	Ground
3	Clock
4	No Connection

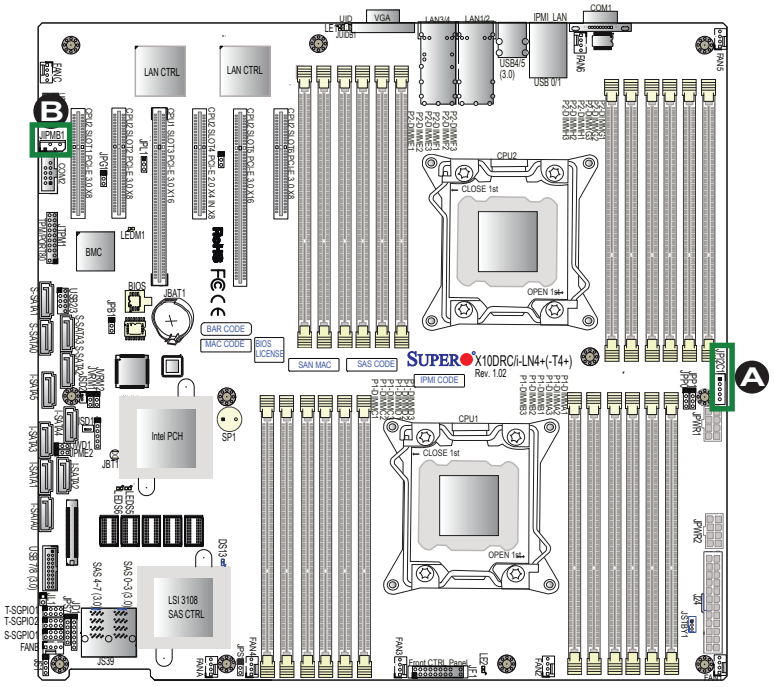

A. JPI²C1

B. JIPMB1

T-SGPIO1/2 & S-SGPIO1 Headers

Three SGPIO (Serial Link General Purpose Input/Output) headers are located on the motherboard. T-SGPIO1/2 support onboard I-SATA connections from the Intel PCH, and S-SGPIO1 supports onboard S-SATA connections from the Intel SCU. See the table on the right for pin definitions.

T-SGPIO/S-SGPIO Headers Pin Definitions

Pin#	Definition	Pin	Definition
1	NC	2	NC
3	Ground	4	Data
5	Load	6	Ground
7	Clock	8	NC

Note: NC= No Connection

T-SGPIO0-1, & S-SGPIO1 Support

T/S-SGPIO#	I-SATA Ports Supported
T-SGPIO1	I-SATA Ports 0-3 Supported
T-SGPIO2	I-SATA Ports 4/5 Supported
S-SGPIO1	S-SATA Ports 0-3 Supported

Power LED/Speaker

Pins 1-3 of JD1 are used for power LED indication, and pins 4-7 are for the speaker. Close pins 4-7 of JD1 to use the speaker connector as an external speaker. To use it as an onboard buzzer, please close pins 6-7 of JD1 with a cap. See the tables on the right for pin definitions.

PWR LED Connector Pin Definitions

Pin Setting	Definition
Pin 1	JD1_PIN1
Pin 2	FP_PWR_LED
Pin 3	FP_PWR_LED

Speaker Connector Pin Settings

Pin Setting	Definition
Pin 4	P5V
Pin 5	Key
Pin 6	R_SPKPIN_N
Pin 7	R_SPKPIN

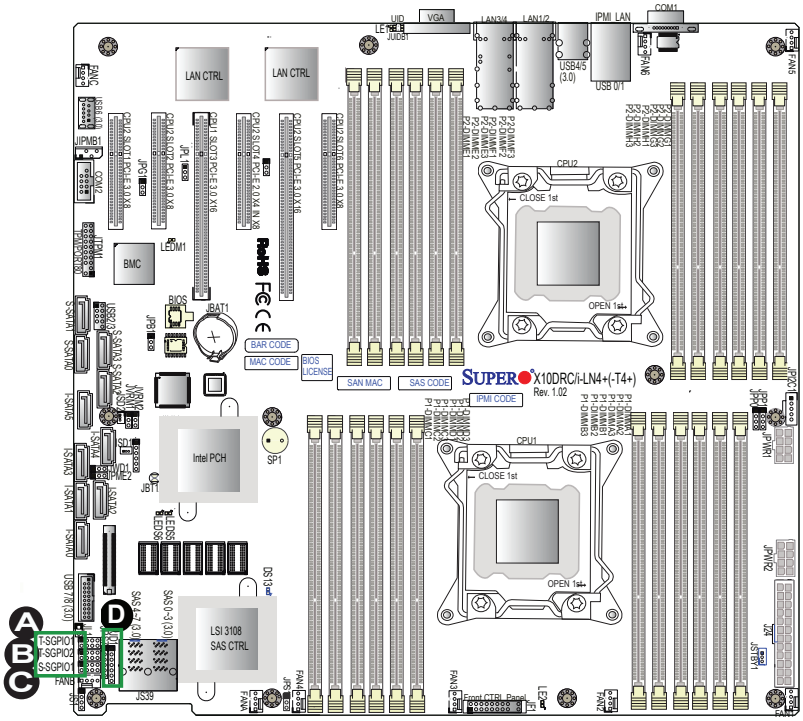

A. T-SGPIO1

B. T-SGPIO2

C. S-SGPIO1

D. PWR LED/Speaker

2-8 Jumper Settings

Explanation of Jumpers

To modify the operation of the motherboard, jumpers can be used to choose between optional settings. Jumpers create shorts between two pins to change the function of the connector. Pin 1 is identified with a square solder pad on the printed circuit board. See the motherboard layout pages for jumper locations.

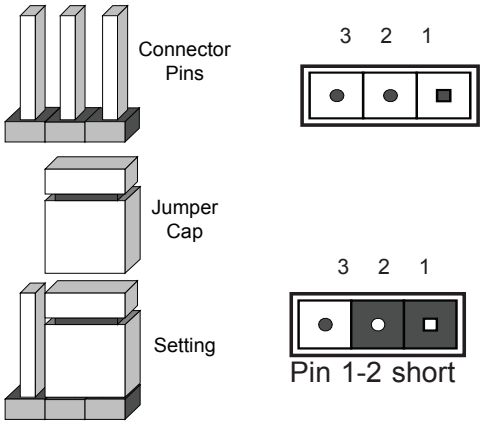

Note: On two-pin jumpers, "Closed" means the jumper is on and "Open" means the jumper is off the pins.

LAN Enable/Disable

Use JPL1 to enable Gigabit LAN ports 1/2 on the -LN4+ model and 10G-LAN ports 1/2 on the -T4+ model. Use JPL2 to enable Gigabit LAN Ports 3/4 on the -LN4+ model and (10G) T- LAN Ports 3/4 on the -T4+ model. See the table on the right for jumper settings. The default setting is Enabled.

LAN Enable Jumper Settings	
Jumper Setting	Definition
1-2	Enabled (default)
2-3	Disabled

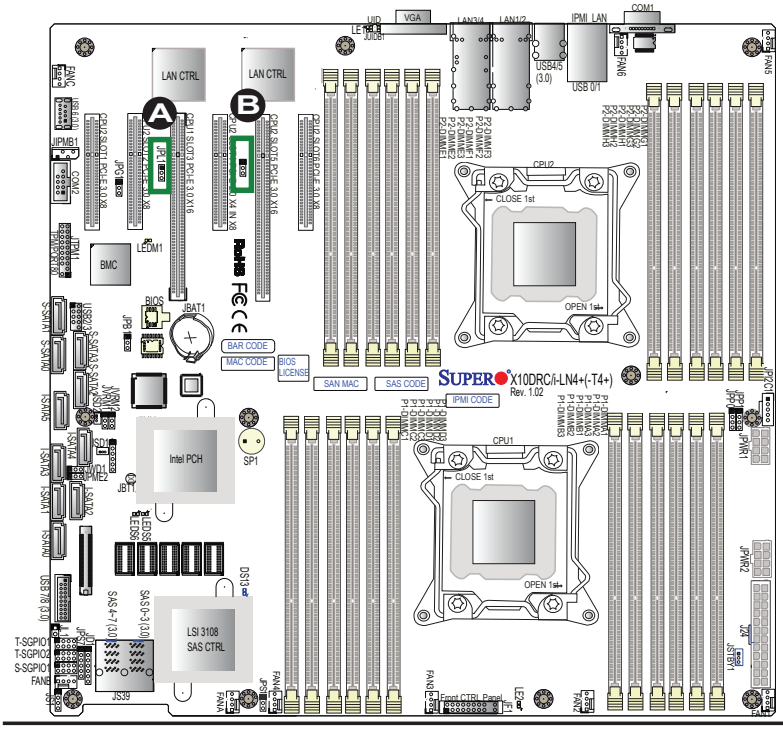

A. GLAN1/2 Enable (-LN4+)

A. TLAN1/2 Enable (-T4+)

B. GLAN3/4 Enable (-LN4+)

B. TLAN3/4 Enable (-T4+)

CMOS Clear

JBT1 is used to clear CMOS. Instead of pins, this "jumper" consists of contact pads to prevent accidental clearing of CMOS. To clear CMOS, use a metal object such as a small screwdriver to touch both pads at the same time to short the connection.

Note: Please completely shut down the system, and then short JBT1 to clear CMOS.

Watch Dog Enable/Disable

Watch Dog (JWD1) is a system monitor that will reboot the system when a software application hangs. Close pins 1-2 to reset the system if an application hangs. Close pins 2-3 to generate a non-maskable interrupt signal for the application that hangs. See the table on the right for jumper settings. Watch Dog must also be enabled in the BIOS.

Watch Dog Jumper Settings	
Jumper Setting	Definition
Pins 1-2	Reset (default)
Pins 2-3	NMI
Open	Disabled

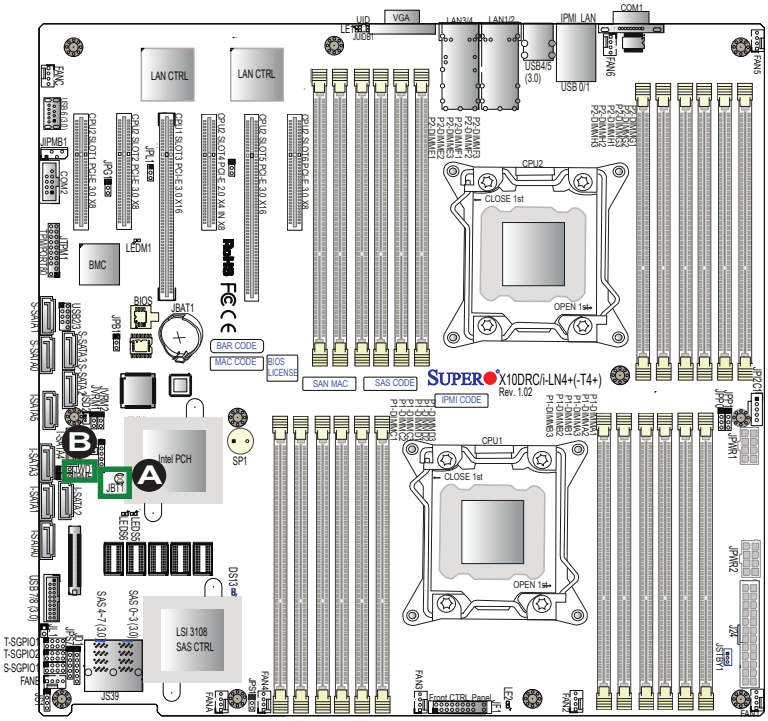

A. Clear CMOS

B. Watch Dog Enable

VGA Enable

Jumper JPG1 allows the user to enable the onboard VGA connector. The default setting is on pins 1-2 to enable the connection. See the table on the right for jumper settings.

VGA Enable Jumper Settings	
Jumper Setting	Definition
1-2	Enabled (Default)
2-3	Disabled

BMC Enable

Jumper JPB1 allows you to enable the embedded ASpeed AST 2400 BMC (Baseboard Management) Controller to provide IPMI 2.0/KVM support on the motherboard. See the table on the right for jumper settings.

BMC Enable Jumper Settings	
Jumper Setting	Definition
Pins 1-2	BMC Enable (Default)
Pins 2-3	Disabled

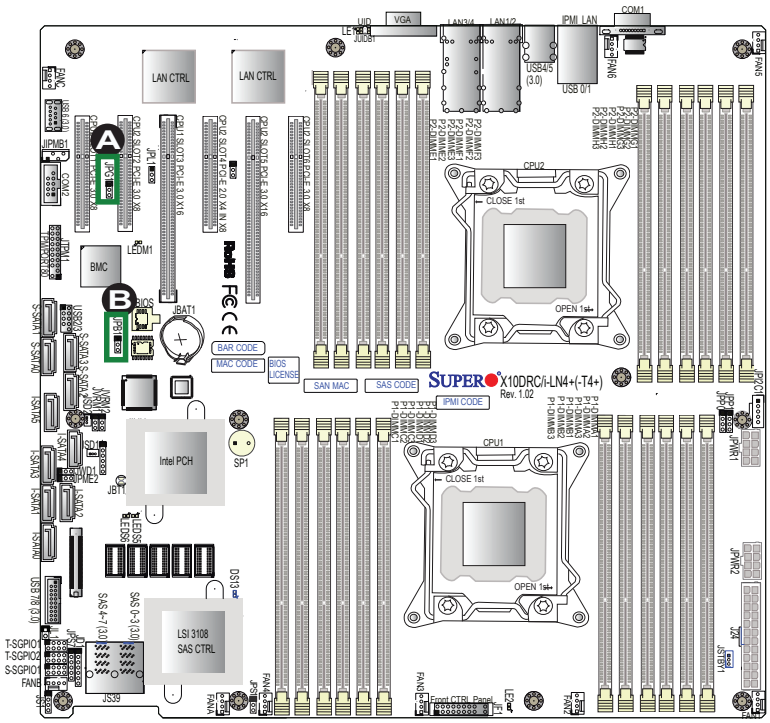

A. VGA Enabled

B. BMC Enabled

Manufacturer Mode Select

Close pins 2-3 of Jumper JPME2 to bypass SPI flash security and force the system to operate in the Manufacturer mode, allowing the user to flash the system firmware from a host server for system setting modifications. See the table on the right for jumper settings.

ME Mode Select Jumper Settings	
Jumper Setting	Definition
1-2	Normal (Default)
2-3	Manufacture Mode

SAS Enable (For X10DRC-LN4+/T4+)

Close pins 1-2 of JPS1 to enable the onboard LSI 3108 controller on the X10DRC-LN4+/T4+. See the table on the right for jumper settings. The default setting is enabled.

SAS Enable Jumper Settings	
Jumper Setting	Definition
Pins 1-2	SAS Enable (Default)
Pins 2-3	Disabled

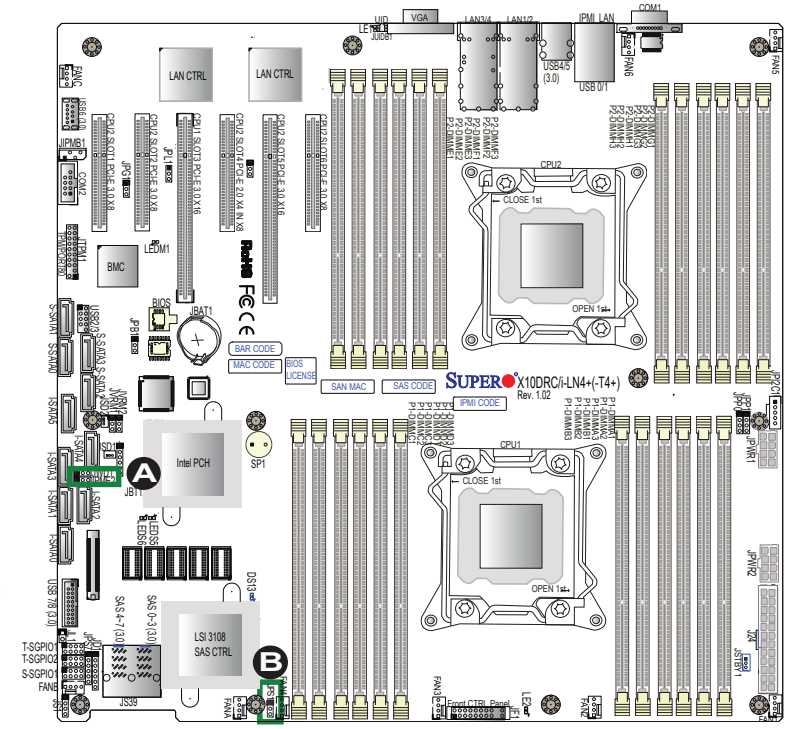

A. ME Mode Select

B. SAS Enable (X10DRC only)

2-9 LED Indicators

LAN Port LEDs

Four LAN ports (LAN 1/2 & LAN 3/4) are located on the IO back panel of the motherboard. Each Ethernet LAN port has two LEDs. The orange LED on the left indicates activity, while the other Link LED may be green, amber or off to indicate the speed of the connections. See the tables at right for more information.

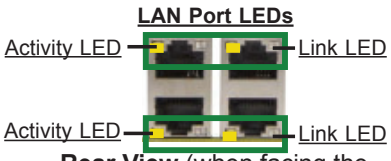

Rear View (when facing the rear side of the chassis)

LAN Port Activity LED (Left) LED State		
Color	Status	Definition
Orange	Flashing	Active

LAN Link LED Settings (For X10DRC/i-LN4+)	
Color	Definition
Off	No Connection, 10 Mbps
Green	100 Mbps
Amber	1 Gbps

10G-LAN Link LED Settings (For X10DRC/i-T)	
Color	Definition
Off	No Connection, 10 or 100 Mbps
Green	10 Gbps
Amber	1 Gbps

IPMI Dedicated LAN LEDs

In addition to LAN 1/LAN 2, an IPMI-LAN is also located on the I/O back panel. The amber LED on the right indicates activity, while the green LED on the left indicates the speed of the connection. See the tables at right for more information.

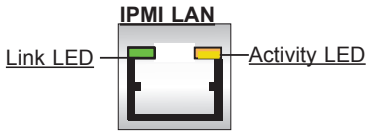

IPMI LAN Link LED (Left) & Activity LED (Right)		
	Color/State	Definition
Link (Left)	Green: Solid	100 Mbps
	Amber: Solid	1 Gbps
Activity (Right)	Orange: Blinking	Active

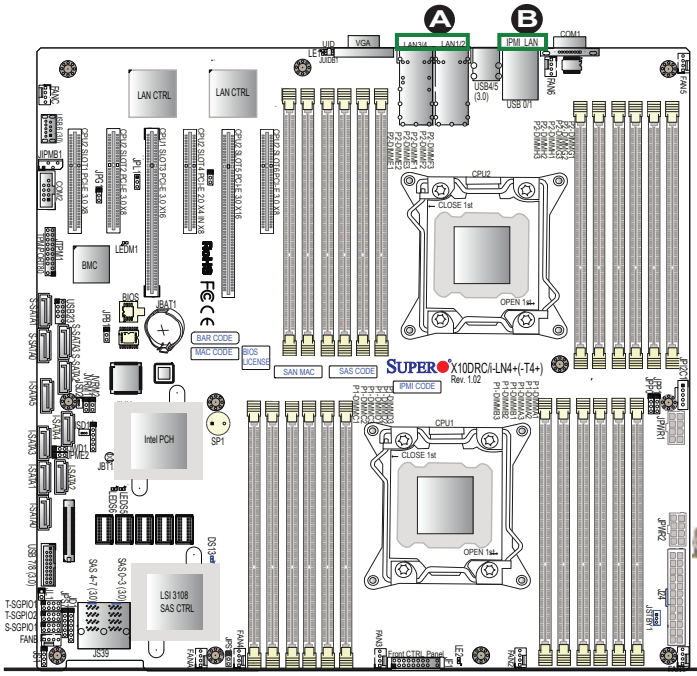

A. LAN1/2 & LAN3/4 LEDs

B. IPMI LAN LEDs

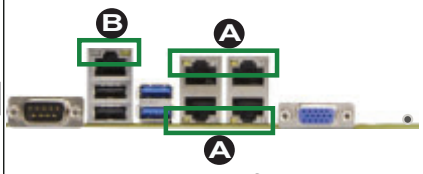

Rear View (when facing the rear side of the chassis)

Onboard Power LED

An Onboard Power LED is located at LE2 on the motherboard. When this LED is on, the system is on. Be sure to turn off the system and unplug the power cord before removing or installing components. See the table at right for more information.

Onboard PWR LED Indicator LED States	
Color/State	Definition
Off	System Power Off
Green: On	System Power On

BMC Heartbeat LED

A BMC Heartbeat LED is located at LEDM1 on the motherboard. When LEDM1 is blinking, BMC functions normally. See the table at right for more information.

BMC Heartbeat LED States	
Color/State	Definition
Green: Blinking	BMC: Normal

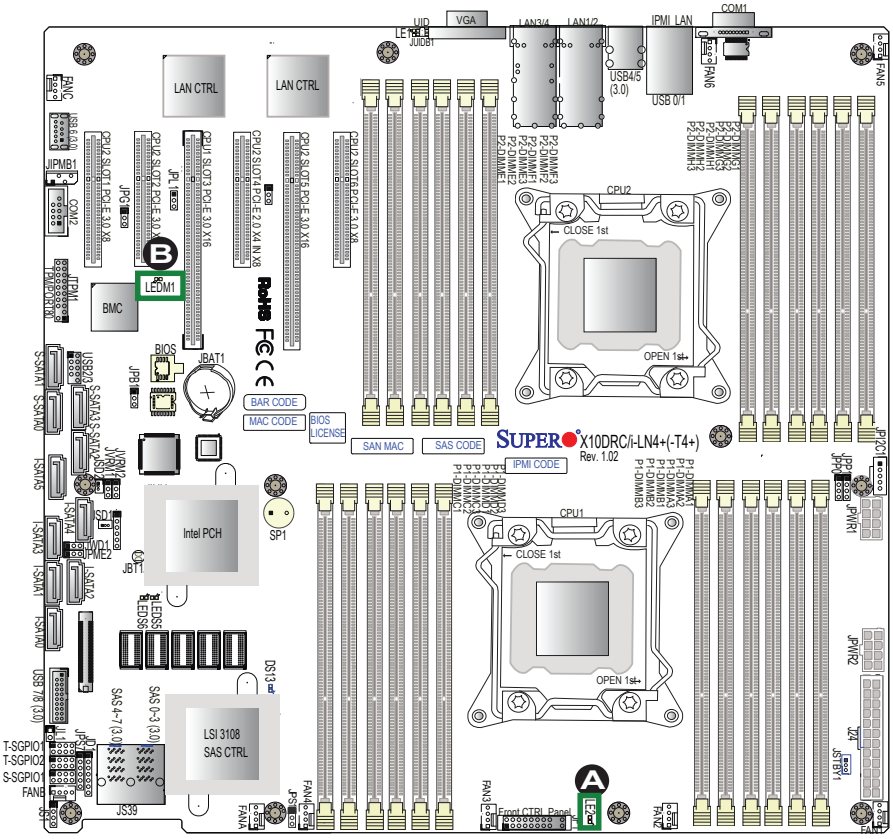

A. PWR LED

B. BMC LED

SAS Heartbeat LED (for the X10DRC-LN4+/T4+ only)

A SAS Heartbeat LED is located at DS13 on the motherboard. When DS13 is blinking, SAS is working properly.

SAS Heartbeat LED LED Settings	
Color/State	Definition
Green: Blinking	SAS: Normal
Off	SAS: Disabled or Failed

SAS Activity LED (for the X10DRC-LN4+/T4+ only)

A SAS Activity LED is located at LEDS5 on the motherboard. When LEDS5 is blinking, SAS is active.

SAS Activity LED LED Settings	
Color/State	Definition
Green: Blinking	SAS: Active

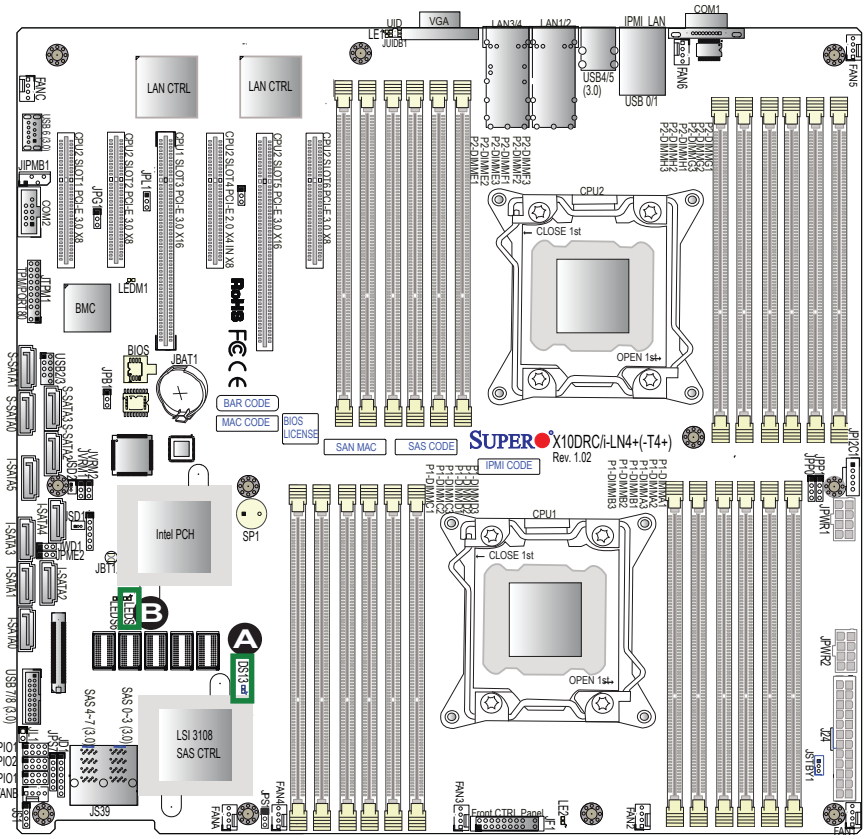

A. SAS Heartbeat LED

B. SAS Activity LED

SAS Error LED (for the X10DRC-LN4+/T4+ only)

A SAS Error LED is located at LEDS6 on the motherboard. When LEDS6 is on, a SAS error has occurred.

SAS Error LED LED Settings	
Color/State	Definition
Red: On	A SAS Error has occurred.

Note: Refer to Page 2-19 for information on the rear UID LED (LE1).

A. SAS Error LED

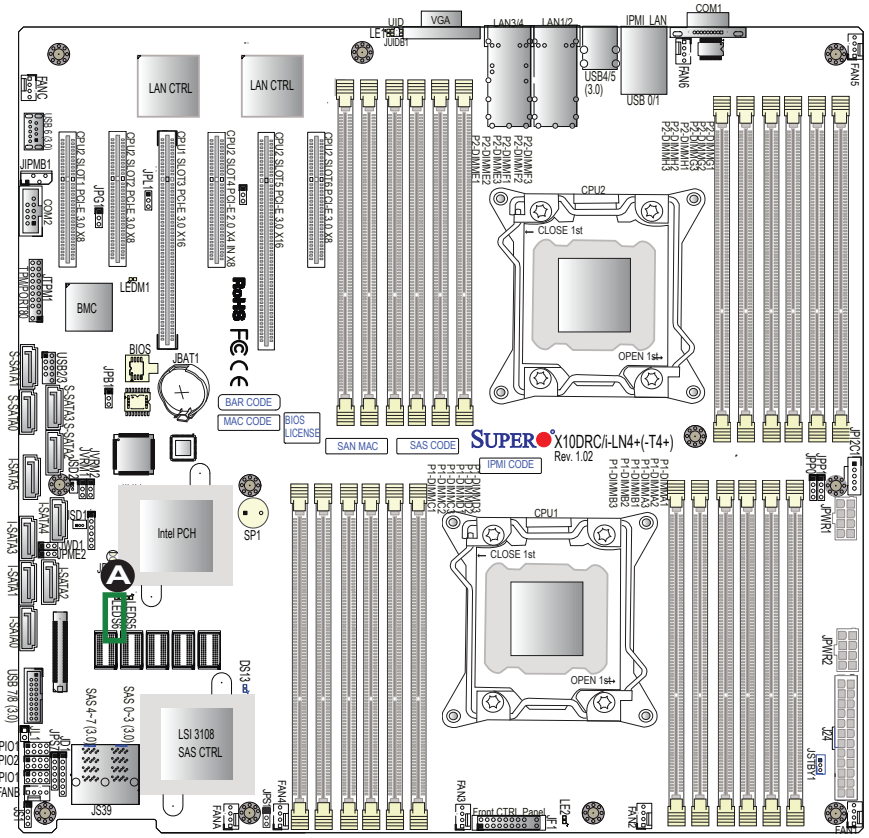

2-10 SATA/SAS Connections

SATA 3.0 Ports

Ten SATA 3.0 ports are located on the motherboard. Six SATA 3.0 ports (I-SATA 0-5) are supported by the Intel PCH C612. The other four SATA ports (S-SATA 0-3) are supported by the Intel SCU. These SATA ports provide serial-link signal connections, which are faster than the connections of Parallel ATA. See the table on the right for pin definitions.

SATA Connectors Pin Definitions	
Pin#	Signal
1	Ground
2	SATA_TXP
3	SATA_TXN
4	Ground
5	SATA_RXN
6	SATA_RXP
7	Ground

Note: For more information on SATA HostRAID configuration, please refer to the Intel SATA HostRAID User's Guide posted on our website @ http://www.supermicro.com..

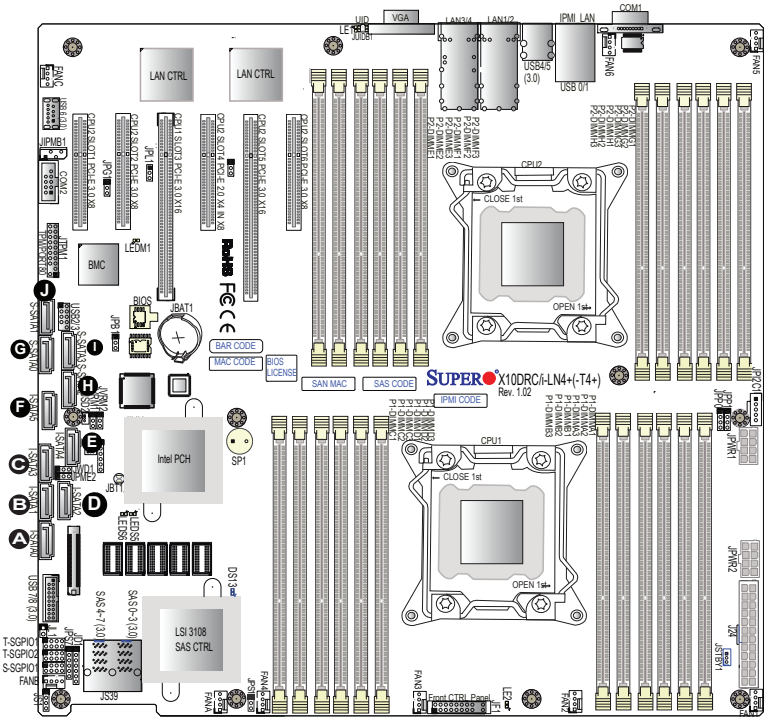

A. I-SATA0
B. I-SATA1
C. I-SATA2
D. I-SATA3
E. I-SATA4
F. I-SATA5
G. S-SATA0
H. S-SATA1
I. S-SATA2
J. S-SATA3

SAS 3.0 Ports (for the X10DRC-LN4+/T4+)

Eight SAS 3.0 ports are located at JS39 on the motherboard. These SAS ports are supported by the LSI 3108 SAS controller. These SAS ports provide serial-link signal connections, which are faster than the connections of Serial ATA (SATA). See the table on the right for pin definitions.

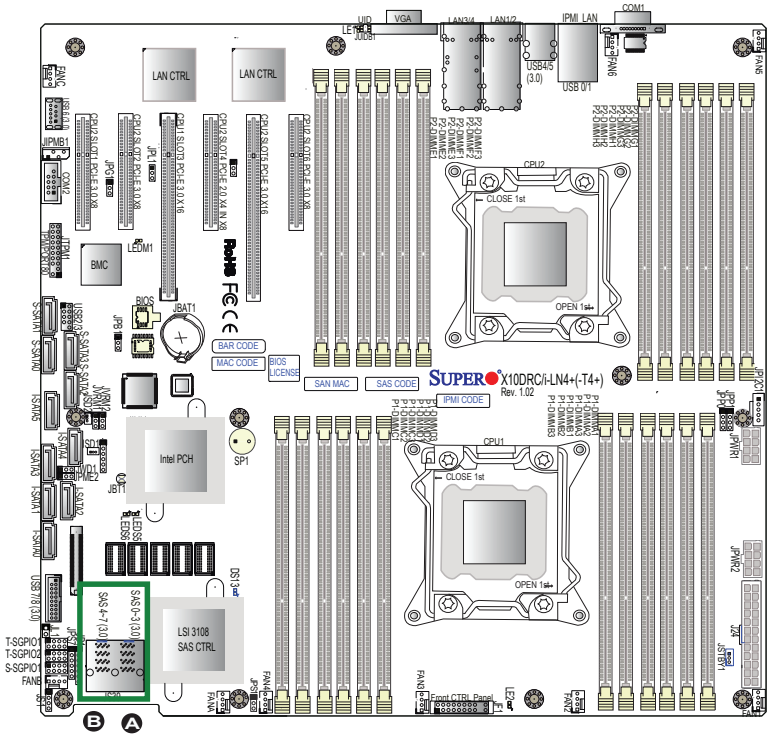

A. SAS 0~3

B. SAS 4~7

Chapter 3

Troubleshooting

3-1 Troubleshooting Procedures

Use the following procedures to troubleshoot your system. If you have followed all of the procedures below and still need assistance, refer to the 'Technical Support Procedures' and/or 'Returning Merchandise for Service' section(s) in this chapter. Note: Always disconnect the power cord before adding, changing or installing any hardware components.

Before Power On

1. Make sure that there are no short circuits between the motherboard and chassis.

2. Disconnect all ribbon/wire cables from the motherboard, including those for the keyboard and mouse.

3. Remove all add-on cards.

4. Install CPU 1 first (-making sure it is fully seated) and connect the front panel connectors to the motherboard.

No Power

1. Make sure that no short circuits between the motherboard and the chassis.

2. Make sure that all power connectors are properly connected.

3. Check that the 115V/230V switch on the power supply is properly set, if available.

4. Turn the power switch on and off to test the system, if applicable.

5. The battery on your motherboard may be old. Check to verify that it still supplies ~3VDC. If it does not, replace it with a new one.

No Video

1. If the power is on, but you have no video, remove all the add-on cards and cables.

2. Use the speaker to determine if any beep codes exist. Refer to Appendix A for details on beep codes.

System Boot Failure

If the system does not display POST or does not respond after the power is turned on, check the following:

1. Check for any error beep from the motherboard speaker.

- If there is no error beep, try to turn on the system without DIMM modules installed. If there is still no error beep, try to turn on the system again with only one processor installed in CPU Socket#1. If there is still no error beep, replace the motherboard.

- If there are error beeps, clear the CMOS settings by unplugging the power cord and contracting both pads on the CMOS Clear Jumper (JBT1). (Refer to the Jumper Section in Chapter 2.)

2. Remove all components from the motherboard, especially the DIMM modules. Make sure that system power is on, and memory error beeps are activated.

3. Turn on the system with only one DIMM module installed. If the system boots, check for bad DIMM modules or slots by following the Memory Errors Troubleshooting procedure in this Chapter.

Losing the System's Setup Configuration

1. Make sure that you are using a high quality power supply. A poor quality power supply may cause the system to lose the CMOS setup information. Refer to Section 1-6 for details on recommended power supplies.

2. The battery on your motherboard may be old. Check to verify that it still supplies ~3VDC. If it does not, replace it with a new one.

3. If the above steps do not fix the Setup Configuration problem, contact your vendor for repairs.

Memory Errors

When a No-Memory Beep Code is issued by the system, check the following:

1. Make sure that the memory modules are compatible with the system and that the DIMM modules are properly and fully installed. (For memory compatibility, refer to the Memory Compatibility Chart posted on our website @ http://www.supermicro.com.)

2. Check if different speeds of DIMMs have been installed. It is strongly recommended that you use the same RAM type and speed for all DIMMs in the system.

3. Make sure that you are using the correct type of Registered (RDIMM)/Load Reduced (LRDIMM) ECC DDR4 DIMM modules recommended by the manufacturer.

4. Check for bad DIMM modules or slots by swapping a single module among all memory slots and check the results.

5. Make sure that all memory modules are fully seated in their slots. Follow the instructions given in Section 2-5 in Chapter 2.

6. Please follow the instructions given in the DIMM Population Tables listed in Section 2-5 to install your memory modules.

When the System Becomes Unstable

A. When the system becomes unstable during or after OS installation, check the following:

1. CPU/BIOS support: Make sure that your CPU is supported, and you have the latest BIOS installed in your system.

2. Memory support: Make sure that the memory modules are supported by testing the modules using memtest86 or a similar utility.

   Note: Refer to the product page on our website http:\\www.supermicro.com for memory and CPU support and updates.

3. HDD support: Make sure that all hard disk drives (HDDs) work properly. Replace the bad HDDs with good ones.

4. System cooling: Check system cooling to make sure that all heatsink fans, and CPU/system fans, etc., work properly. Check Hardware Monitoring set-

tings in the IPMI to make sure that the CPU and System temperatures are within the normal range. Also check the front panel Overheat LED, and make sure that the Overheat LED is not on.

5. Adequate power supply: Make sure that the power supply provides adequate power to the system. Make sure that all power connectors are connected. Please refer to our website for more information on minimum power requirement.

6. Proper software support: Make sure that the correct drivers are used.

B. When the system becomes unstable before or during OS installation, check the following:

1. Source of installation: Make sure that the devices used for installation are working properly, including boot devices such as CD/DVD disc.

2. Cable connection: Check to make sure that all cables are connected and working properly.

3. Using minimum configuration for troubleshooting: Remove all unnecessary components (starting with add-on cards first), and use minimum configuration (with a CPU and a memory module installed) to identify the trouble areas. Refer to the steps listed in Section A above for proper troubleshooting procedures.

4. Identifying bad components by isolating them: If necessary, remove a component in question from the chassis, and test it in isolation to make sure that it works properly. Replace a bad component with a good one.

5. Check and change one component at a time instead of changing several items at the same time. This will help isolate and identify the problem.

6. To find out if a component is good, swap this component with a new one to see if the system will work properly. If so, then the old component is bad. You can also install the component in question in another system. If the new system works, the component is good and the old system has problems.

3-2 Technical Support Procedures

Before contacting Technical Support, please take the following steps. Also, please note that as a motherboard manufacturer, Supermicro also sells motherboards through its channels, so it is best to first check with your distributor or reseller for troubleshooting services. They should know of any possible problem(s) with the specific system configuration that was sold to you.

1. Please go through the 'Troubleshooting Procedures' and 'Frequently Asked Question' (FAQ) sections in this chapter or see the FAQs on our website (http://www.supermicro.com/) before contacting Technical Support.

2. BIOS upgrades can be downloaded from our website (http://www.supermicro.com).

3. If you still cannot resolve the problem, include the following information when contacting Supermicro for technical support:

- Motherboard model and PCB revision number
- BIOS release date/version (This can be seen on the initial display when your system first boots up.)
- System configuration

4. An example of a Technical Support form is on our website at (http://www.supermicro.com/RmaForm/).

- Distributors: For immediate assistance, please have your account number ready when placing a call to our technical support department. We can be reached by e-mail at support@supermicro.com.

3-3 Battery Removal and Installation

Battery Removal

To remove the onboard battery, follow the steps below:

1. Power off your system and unplug your power cable.
2. Locate the onboard battery as shown below.
3. Using a tool such as a pen or a small screwdriver, push the battery lock outwards to unlock it. Once unlocked, the battery will pop out from the holder.
4. Remove the battery.

Proper Battery Disposal

Warning! Please handle used batteries carefully. Do not damage the battery in any way; a damaged battery may release hazardous materials into the environment. Do not discard a used battery in the garbage or a public landfill. Please comply with the regulations set up by your local hazardous waste management agency to dispose of your used battery properly.

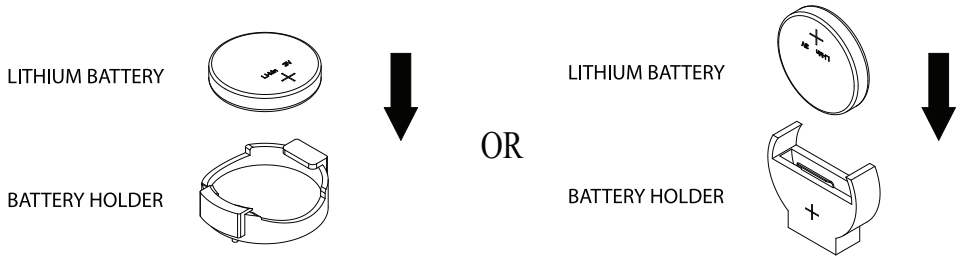

3-4 Frequently Asked Questions

Question: What are the various types of memory that my motherboard can support?

Answer: The motherboard supports Registered (RDIMM)/Load Reduced (LRDIMM) ECC DDR4 DIMM modules. To enhance memory performance, do not mix memory modules of different speeds and sizes. Please follow all memory installation instructions given on Section 2-5 in Chapter 2.

Question: How do I update my BIOS?

It is recommended that you **do not** upgrade your BIOS if you are not experiencing any problems with your system. Updated BIOS files are located on our website at http://www.supermicro.com. Please check our BIOS warning message and the information on how to update your BIOS on our website. Select your motherboard model and download the BIOS file to your computer. Also, check the current BIOS revision to make sure that it is newer than your BIOS before downloading. You can choose from the zip file and the .exe file. If you choose the zip BIOS file, please unzip the BIOS file onto a bootable USB device. Run the batch file using the format FLASH.BAT filename.rom from your bootable USB device to flash the BIOS. Then, your system will automatically reboot.

Warning: Do not shut down or reset the system while updating the BIOS to prevent possible system boot failure!)

Note: The SPI BIOS chip used on this motherboard cannot be removed. Send your motherboard back to our RMA Department at Supermicro for repair. For BIOS Recovery instructions, please refer to the AMI BIOS Recovery Instructions posted at http://www.supermicro.com.

Question: How do I handle the used battery?

Answer: Please handle used batteries carefully. Do not damage the battery in any way; a damaged battery may release hazardous materials into the environment. Do not discard a used battery in the garbage or a public landfill. Please comply with the regulations set up by your local hazardous waste management agency to dispose of your used battery properly.

3-5 Returning Merchandise for Service

A receipt or copy of your invoice marked with the date of purchase is required before any warranty service will be rendered. You can obtain service by calling your vendor for a Returned Merchandise Authorization (RMA) number. When returning the motherboard to the manufacturer, the RMA number should be prominently displayed on the outside of the shipping carton, and the shipping package is mailed prepaid or hand-carried. Shipping and handling charges will be applied for all orders that must be mailed when service is complete. For faster service, You can also request a RMA authorization online (http://www.supermicro.com/RmaForm/).

This warranty only covers normal consumer use and does not cover damages incurred in shipping or from failure due to the alternation, misuse, abuse or improper maintenance of products.

During the warranty period, contact your distributor first for any product problems.

Chapter 4

BIOS

4-1 Introduction

This chapter describes the AMI BIOS setup utility for the X10DRC/i-LN4+/-T4+. The ROM BIOS is stored in a Flash EEPROM and can be easily updated. This chapter describes the basic navigation of the AMI BIOS setup utility screens.

Note: For AMI BIOS recovery, please refer to the UEFI BIOS Recovery Instructions in Appendix C.

Starting BIOS Setup Utility

To enter the AMI BIOS setup utility screens, press the <Delete> key while the system is booting up.

Note: In most cases, the <Delete> key is used to invoke the AMI BIOS setup screen.

Each main BIOS menu option is described in this manual. The AMI BIOS setup menu screen has two main frames. The left frame displays all the options that can be configured. Grayed-out options cannot be configured. Options in blue can be configured by the user. The right frame displays the key legend. Above the key legend is an area reserved for a text message. When an option is selected in the left frame, it is highlighted in white. Often a text message will accompany it.

Note: the AMI BIOS has default text messages built in. Supermicro retains the option to include, omit, or change any of these text messages.

The AMI BIOS setup utility uses a key-based navigation system called "hot keys." Most of the AMI BIOS setup utility "hot keys" can be used at any time during the setup navigation process. These keys include <F1>, <F4>, <Enter>, <Esc>, arrow keys, etc.

Note: Options printed in **Bold** are default settings.

How To Change the Configuration Data

The configuration data that determines the system parameters may be changed by entering the AMI BIOS setup utility. This setup utility can be accessed by pressing <Del> at the appropriate time during system boot.

How to Start the Setup Utility

Normally, the only visible Power-On Self-Test (POST) routine is the memory test. As the memory is being tested, press the <Delete> key to enter the main menu of the AMI BIOS setup utility. From the main menu, you can access the other setup screens. An AMI BIOS identification string is displayed at the left bottom corner of the screen, below the copyright message.

Warning: Do not upgrade the BIOS unless your system has a BIOS-related issue. Flashing the wrong BIOS can cause irreparable damage to the system. In no event shall Supermicro be liable for direct, indirect, special, incidental, or consequential damages arising from a BIOS update. If you have to update the BIOS, do not shut down or reset the system while the BIOS is updating to avoid possible boot failure.

4-2 Main Setup

When you first enter the AMI BIOS setup utility, you will enter the Main setup screen. You can always return to the Main setup screen by selecting the Main tab on the top of the screen. The Main BIOS setup screen is shown below.

The following Main menu items will be displayed:

System Date/System Time

Use this option to change the system date and time. Highlight *System Date* or *System Time* using the arrow keys. Enter new values using the keyboard. Press the <Tab> key or the arrow keys to move between fields. The date must be entered in Day MM/DD/YYYY format. The time is entered in HH:MM:SS format.

Note: The time is in the 24-hour format. For example, 5:30 P.M. appears as 17:30:00.

Supermicro X10DRC-T4+ Series

BIOS Version: This item displays the version of the BIOS ROM used in the system.

Build Date: This item displays the date when the version of the BIOS ROM used in the system was built.

Memory Information

Total Memory: This item displays the total size of memory available in the system.

Memory Speed: This item displays the default speed of the memory modules installed in the system.

4-3 Advanced Setup Configurations

Use the arrow keys to select Advanced setup and press <Enter> to access the submenu items:

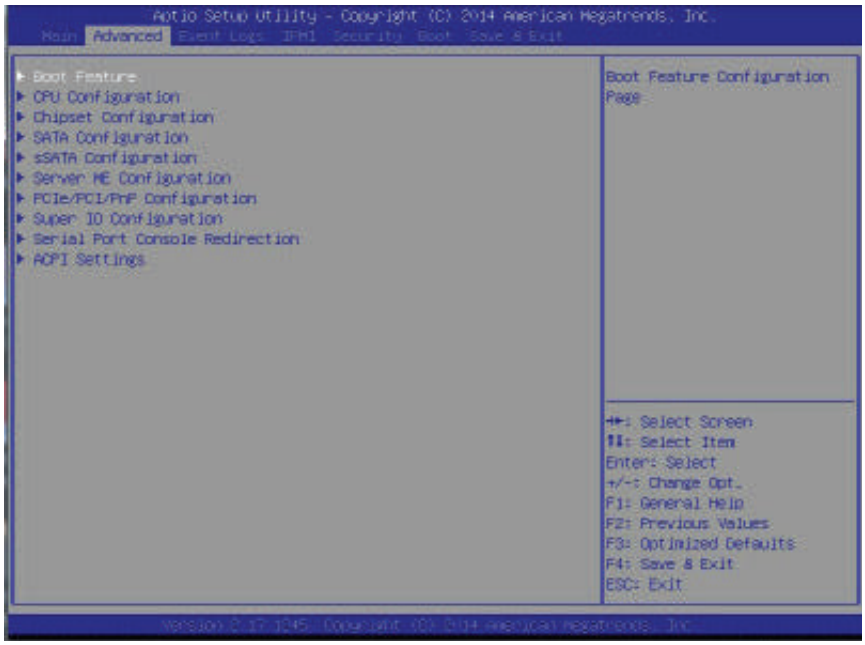

Warning: Take Caution when changing the Advanced settings. An incorrect value, a very high DRAM frequency or an incorrect BIOS timing setting may cause the system to malfunction. When this occurs, restore the setting to the manufacture default setting.

▶Boot Feature

Quiet Boot

Use this feature to select the screen display between POST messages or the OEM logo at bootup. Select Disabled to display the POST messages. Select Enabled to display the OEM logo instead of the normal POST messages. The options are **Enabled** and Disabled.

AddOn ROM Display Mode

Use this item to set the display mode for the Option ROM. Select Keep Current to use the current AddOn ROM display setting. Select Force BIOS to use the Option ROM display mode set by the system BIOS. The options are **Force BIOS** and Keep Current.

Bootup Num-Lock State

Use this item to set the Power-on state for the Numlock key. The options are Off and **On**.

Wait For 'F1' If Error

Select Enabled to force the system to wait until the <F1> key is pressed if an error occurs. The options are Disabled and **Enabled**.

INT19 (Interrupt 19) Trap Response

Interrupt 19 is the software interrupt that handles the boot disk function. When this item is set to Immediate, the ROM BIOS of the host adaptors will "capture" Interrupt 19 at bootup immediately and allow the drives that are attached to the host adaptors to function as bootable disks. If this item is set to Postponed, the ROM BIOS of the host adaptors will not capture Interrupt 19 immediately to allow the drives attached to the adaptors to function as bootable devices at bootup. The options are **Immediate** and Postponed.

Re-try Boot

Select EFI Boot to allow the BIOS to automatically reboot the system from an EFI boot device after its initial boot failure. Select Legacy Boot to allow the BIOS to automatically reboot the system from a Legacy boot device after its initial boot failure. The options are **Disabled**, Legacy Boot, and EFI Boot.

Power Configuration

Watch Dog Function

Select Enabled to allow the Watch Dog timer to reboot the system when it is inactive for more than 5 minutes. The options are Enabled and **Disabled.**

Power Button Function

This feature controls how the system shuts down when the power button is pressed. Select 4 Seconds Override for the user to power off the system after pressing and holding the power button for 4 seconds or longer. Select Instant Off to instantly power off the system as soon as the user presses the power button. The options are 4 Seconds Override and **Instant Off.**

Restore on AC Power Loss

Use this feature to set the power state after a power outage. Select Power-Off for the system power to remain off after a power loss. Select Power-On for the system power to be turned on after a power loss. Select Last State to allow the system to resume its last power state before a power loss. The options are Power-On, Stay-Off, and **Last State**.

▶CPU Configuration

This submenu displays the following CPU information as detected by the BIOS. It also allows the user to configure CPU settings.

- Processor Socket
- Processor ID
- Processor Frequency
- Processor Max Ratio
- Processor Min Ratio
- Microcode Revision
- L1 Cache RAM
- L2 Cache RAM
- L3 Cache RAM
- CPU 1 Version
- CPU 2 Version

Clock Spread Spectrum

Select Enabled to allow the BIOS to monitor and attempt to reduce the level of Electromagnetic Interference caused by the components whenever needed. The options are **Disabled** and Enabled.

Hyper-Threading (All)

Select Enable to support Intel's Hyper-threading Technology to enhance CPU performance. The options are **Enable** and Disable.

Cores Enabled

This feature allows the user to determine the number of CPU cores to enable. Enter "0" to enable all cores. There are 14 cores available in the system. The default setting is **0**, which enables all CPU cores in the system.

Execute Disable Bit (Available if supported by the OS & the CPU)

Select Enable for Execute Disable Bit Technology support, which will allow the processor to designate areas in the system memory where an application code can execute and where it cannot, thus preventing a worm or a virus from flooding

illegal codes to overwhelm the processor to damage the system during an attack. The options are **Enable** and Disable. (Refer to Intel's and Microsoft's websites for more information.)

PPIN Control

Select Unlock/Enable to use the Protected-Processor Inventory Number (PPIN) control in the system. The options are **Unlock/Enable** and Unlock/Disable.

Hardware Prefetcher (Available when supported by the CPU)

If set to Enable, the hardware prefetcher will prefetch streams of data and instructions from the main memory to the L2 cache to improve CPU performance. The options are Disable and **Enable**.

Adjacent Cache Line Prefetch (Available when supported by the CPU)

Select Enable for the CPU to prefetch both cache lines for 128 bytes as comprised. Select Disable for the CPU to prefetch both cache lines for 64 bytes. The options are Disable and **Enable**.

Note: Please reboot the system for changes on this setting to take effect. Please refer to Intel's website for detailed information.

DCU (Data Cache Unit) Streamer Prefetcher (Available when supported by the CPU)

If set to Enable, the DCU Streamer prefetcher will prefetch data streams from the cache memory to the DCU (Data Cache Unit) to speed up data accessing and processing to enhance CPU performance. The options are Disable and **Enable**.

DCU IP Prefetcher

If set to Enable, the IP prefetcher in the DCU (Data Cache Unit) will prefetch IP addresses to improve network connectivity and system performance. The options are **Enable** and Disable.

Direct Cache Access (DCA)

Select Enable to use Intel DCA (Direct Cache Access) Technology to improve the efficiency of data transferring and accessing. The options are **Auto**, Enable, and Disable.

X2 APIC (Advanced Programmable Interrupt Controller)

Based on Intel's Hyper-Threading architecture, each logical processor (thread) is assigned 256 APIC IDs (APIDs) in 8-bit bandwidth. When this feature is set to Enable, the APIC ID will expand(X2) from 8 bits to 16 bits to provide 512 APIDs to each thread for CPU performance enhancement. The options are **Disable** and Enable.

AES-NI

Select Enable to use the Intel Advanced Encryption Standard (AES) New Instructions (NI) to ensure data security. The options are Enable and **Disable**.

Intel Virtualization Technology

Select Enable to use Intel Virtualization Technology support for Direct I/O VT-d support by reporting the I/O device assignments to the VMM (Virtual Machine Monitor) through the DMAR ACPI tables. This feature offers fully-protected I/O resource sharing across Intel platforms, providing greater reliability, security and availability in networking and data-sharing. The options are **Enable** and Disable.

▶ Advanced Power Management Configuration

Advanced Power Management Configuration

Power Technology

Select Energy Efficient to support power-saving mode. Select Custom to customize system power settings. Select Disabled to disable power-saving settings. The options are Disable, **Energy Efficient**, and Custom.

▶ CPU P State Control (Available when Power Technology is set to Custom)

EIST (P-States)

EIST (Enhanced Intel SpeedStep Technology) allows the system to automatically adjust the processor voltage and core frequency to reduce power consumption and heat dissipation. The options are Disable and **Enable**.

Turbo Mode

Select Enabled to use the Turbo Mode to boost system performance. The options are **Enable** and Disable.

P-State Coordination

This feature is used to change the P-state (Power-Performance State) coordination type. P-state is also known as "SpeedStep" for Intel processors. Select HW_ALL to change the P-state coordination type for hardware components only. Select SW_ALL to change the P-state coordination type for all software installed in the system. Select SW_ANY to change the P-state coordination type for a software program in the system. The options are **HW_All,** SW_ALL, and SW_ANY.

▶ CPU C State Control (Available when Power Technology is set to Custom)

Package C State limit

Use this item to set the limit on the C-State package register. The options are C0/1 state, C2 state, C6 (non-Retention) state, and **C6 (Retention) state**.

CPU C3 Report

Select Enable to allow the BIOS to report the CPU C3 State (ACPI C2) to the operating system. During the CPU C3 State, the CPU clock generator is turned off. The options are Enable and **Disable.**

CPU C6 Report (Available when Power Technology is set to Custom)

Select Enable to allow the BIOS to report the CPU C6 state (ACPI C3) to the operating system. During the CPU C6 state, power to all cache is turned off. The options are **Enable** and Disable.

Enhanced Halt State (C1E)

Select Enabled to use Enhanced Halt-State technology, which will significantly reduce CPU power consumption by reducing CPU clock cycles and voltages during a Halt-state. The options are Disable and **Enable**.

▶ CPU T State Control (Available when Power Technology is set to Custom)

ACPI (Advanced Configuration Power Interface) T-States

Select Enable to support CPU throttling by the operating system to reduce power consumption. The options are **Enable** and Disable.

▶Chipset Configuration

Warning! Please set the correct settings for the items below. A wrong configuration setting may cause the system to become malfunction.

▶North Bridge

This feature allows the user to configure the settings for the Intel North Bridge.

▶IIO Configuration

EV DFX (Device Function On-Hide) Features

When this feature is set to Enable, the EV_DFX Lock Bits that are located on a processor will always remain clear during electric tuning. The options are **Disable** and Enable.

▶IIO1 Configuration

IOU2 (II0 PCIe Port 1)

This item configures the PCI-E port Bifuraction setting for a PCI-E port specified by the user. The options are x4x4, x8, and **Auto**.

II01 PORT 1A Link Speed

This item configures the link speed of a PCI-E port specified by the user. The options are Gen 1 (Generation 1) (2.5 GT/s), Gen 2 (Generation 2) (5 GT/s), and **Gen 3 (Generation 3) (8 GT/s)**.

IOU0 (II0 PCIe Port 2)

This item configures the PCI-E port Bifuraction setting for a PCI-E port specified by the user. The options are x4x4x4x4, x4x4x8, x8x4x4, x8x8, x16, and **Auto**.

II01 PORT 2A Link Speed

This item configures the link speed of a PCI-E port specified by the user. The options are Gen 1 (Generation 1) (2.5 GT/s), Gen 2 (Generation 2) (5 GT/s), and **Gen 3 (Generation 3) (8 GT/s)**.

IOU1 (II01 PCIe Port 3)

This item configures the PCI-E port Bifuraction setting for a PCI-E port specified by the user. The options are x4x4x4x4, x4x4x8, x8x4x4, x8x8, x16, and **Auto**.

II01 PORT 3A Link Speed

This item configures the link speed of a PCI-E port specified by the user. The options are Gen 1 (Generation 1) (2.5 GT/s), Gen 2 (Generation 2) (5 GT/s), and **Gen 3 (Generation 3) (8 GT/s)**.

II01 PORT 3C Link Speed

This item configures the link speed of a PCI-E port specified by the user. The options are Gen 1 (Generation 1) (2.5 GT/s), Gen 2 (Generation 2) (5 GT/s), and **Gen 3 (Generation 3) (8 GT/s)**.

▶IIO2 Configuration

IOU2 (II02 PCIe Port 1)

This item configures the PCI-E port Bifuraction setting for a PCI-E port specified by the user. The options are x4x4, x8, and **Auto**.

II02 PORT 1A Link Speed

This item configures the link speed of a PCI-E port specified by the user. The options are Gen 1 (Generation 1) (2.5 GT/s), Gen 2 (Generation 2) (5 GT/s), and **Gen 3 (Generation 3) (8 GT/s)**.

IOU0 (II02 PCIe Port 2)

This item configures the PCI-E port Bifuraction setting for a PCI-E port specified by the user. The options are x4x4x4x4, x4x4x8, x8x4x4, x8x8, x16, and **Auto**.

II02 PORT 2A Link Speed

This item configures the link speed of a PCI-E port specified by the user. The options are Gen 1 (Generation 1) (2.5 GT/s), Gen 2 (Generation 2) (5 GT/s), and **Gen 3 (Generation 3) (8 GT/s)**.

IOU1 (II02 PCIe Port 3)

This item configures the PCI-E port Bifuraction setting for a PCI-E port specified by the user. The options are x4x4x4x4, x4x4x8, x8x4x4, x8x8, x16, and **Auto**.

II02 PORT 3A Link Speed

This item configures the link speed of a PCI-E port specified by the user. The options are Gen 1 (Generation 1) (2.5 GT/s), Gen 2 (Generation 2) (5 GT/s), and **Gen 3 (Generation 3) (8 GT/s)**.

II02 PORT 3C Link Speed

This item configures the link speed of a PCI-E port specified by the user. The options are Gen 1 (Generation 1) (2.5 GT/s), Gen 2 (Generation 2) (5 GT/s), and **Gen 3 (Generation 3) (8 GT/s)**.

▶IOAT (Intel® IO Acceleration) Configuration

Enable IOAT

Select Enable to enable Intel I/OAT (I/O Acceleration Technology) support, which significantly reduces CPU overhead by leveraging CPU architectural improvements and freeing the system resource for other tasks. The options are **Enable** and Disable.

No Snoop

Select Enable to support no-snoop mode for each CB device. The options are **Disable** and Enable.

Relaxed Ordering

Select Enable to enable Relaxed Ordering support which will allow certain transactions to violate the strict-ordering rules of PCI bus for a transaction to be completed prior to other transactions that have already been enqueued. The options are **Disable** and Enable.

▶ Intel VT for Directed I/O (VT-d)

Intel® VT for Directed I/O (VT-d)

Select Enable to use Intel Virtualization Technology for Direct I/O VT-d support by reporting the I/O device assignments to the VMM (Virtual Machine Monitor) through the DMAR ACPI tables. This feature offers fully-protected I/O resource sharing across Intel platforms, providing greater reliability, security and availability in networking and data-sharing. The options are **Enable** and Disable.

Interrupt Remapping

Select Enable for Interrupt Remapping support to enhance system performance. The options are **Enable** and Disable.

▶QPI (Quick Path Interconnect) Configuration

▶QPI General Configuration

QPI Status

The following information will display:

- Number of CPU
- Number of II0
- Current QPI Link Speed

- Current QPI Link Frequency
- QPI Global MMIO Low Base/Limit
- QPI Global MMIO High Base/Limit
- QPI PCIe Configuration Base/Size

Link Frequency Select

Use this item to select the desired frequency for QPI Link connections. The options are 6.4GB/s, 8.0GB/s, 9.6GB/s, **Auto,** and Auto Limited.

Link L0p Enable

Select Enable for Link L0p support to reduce power consumption. The options are **Enable** and Disable.

Link L1 Enable

Select Enable for Link L1 support to reduce power consumption. The options are **Enable** and Disable.

COD Enable (Available when the OS and the CPU support this feature)

Select Enable for Cluster-On-Die support to enhance system performance in cloud computing. The options are Enable, **Disable**, and Auto.

Early Snoop (Available when the OS and the CPU support this feature)

Select Enable for Early Snoop support to enhance system performance. The options are Enable, Disable, and **Auto**.

Isoc Mode

Select Enable for Isochronous support to meet QoS (Quality of Service) requirements. This feature is especially important for Virtualization Technology. The options are Enable and **Disable**.

▶Memory Configuration

Enforce POR

Select Enabled to enforce POR restrictions on DDR4 frequency and voltage programming. The options are **Enabled** and Disabled.

Memory Frequency

Use this feature to set the maximum memory frequency for onboard memory modules. The options are **Auto**, 1333, 1400, 1600, 1800, 1867, 2000, 2133, 2200, 2400, and Reserved (Do not select Reserved).

Data Scrambling

Select Enabled to enable data scrambling to enhance system performance and data integrity. The options are **Auto**, Disabled and Enabled.

DRAM RAPL (Running Average Power Limit) Baseline

Use this feature to set the run-time power-limit baseline for DRAM modules. The options are Disable, DRAM RAPL Mode 0, and **DRAM RAPL Mode 1**.

Set Throttling Mode

Throttling improves CPU reliability and reduces power consumption via automatic-voltage control during CPU idle states. The options are Disabled and **CLTT** (Closed Loop Thermal Throttling).

A7 Mode

Select Enable to support the A7 (Addressing) mode to improve memory performance. The options are **Enable** and Disable.

▶DIMM Information

This item displays the status of a DIMM module as detected by the AMI BIOS.

▶Memory RAS (Reliability_Availability_Serviceability) Configuration

Use this submenu to configure the following Memory RAS settings.

RAS Mode

When Disable is selected, RAS is not supported. When Mirror is selected, the motherboard maintains two identical copies of all data in memory for data backup. When Lockstep is selected, the motherboard uses two areas of memory to run the same set of operations in parallel to boost performance. The options are **Disable**, Mirror, and Lockstep Mode.

Memory Rank Sparing

Select Enable to enable memory-sparing support for memory ranks to improve memory performance. The options are **Disabled** and Enabled.

Patrol Scrub

Patrol Scrubbing is a process that allows the CPU to correct correctable memory errors detected on a memory module and send the correction to the requestor (the original source). When this item is set to Enable, the IO hub will read and write back one cache line every 16K cycles, if there is no delay caused by internal processing. By using this method, roughly 64 GB of memory behind the IO hub will be scrubbed every day. The options are **Enable** and Disable.

Patrol Scrub Interval

This feature allows you to decide how many hours the system should wait before the next complete patrol scrub is performed. Use the keyboard to enter a value from 0-24. The Default setting is **24**.

Demand Scrub

Demand Scrubbing is a process that allows the CPU to correct correctable memory errors found on a memory module. When the CPU or I/O issues a demand-read command, and the read data from memory turns out to be a correctable error, the error is corrected and sent to the requestor (the original source). Memory is updated as well. Select Enable to use Demand Scrubbing for ECC memory correction. The options are **Enable** and Disable.

Device Tagging

Select Enable to support device tagging. The options are **Disable** and Enable.

▶South Bridge Configuration

The following South Bridge information will display:

▶USB Configuration

- USB Module Version
- USB Devices

Legacy USB Support

Select Enabled to support onboard legacy USB devices. Select Auto to disable legacy support if there are no legacy USB devices present. Select Disabled to have all USB devices available for EFI applications only. The options are **Enabled**, Disabled and Auto.

XHCI Hand-Off

This is a work-around solution for operating systems that do not support XHCI (Extensible Host Controller Interface) hand-off. The XHCI ownership change should be claimed by the XHCI driver. The settings are **Enabled** and Disabled.

EHCI Hand-Off

This item is for operating systems that do not support Enhanced Host Controller Interface (EHCI) hand-off. When this item is enabled, EHCI ownership change will be claimed by the EHCI driver. The settings are Enabled and **Disabled**.

Port 60/64 Emulation

Select Enabled to support I/O port 60h/64h emulation, which will provide complete legacy USB keyboard support for the operating systems that do not support legacy USB devices. The options are Disabled and **Enabled**.

USB 3.0 Support

Select Enabled for USB 3.0 support. The options are Smart Auto, **Auto**, Enabled, Disabled, and Manual.

EHCI1

Select Enabled to enable EHCI (Enhanced Host Controller Interface) support on USB 2.0 connector #1 (-at least one USB 2.0 connector should be enabled for EHCI support.) The options are Disabled and **Enabled**.

EHCI2

Select Enabled to enable EHCI (Enhanced Host Controller Interface) support on USB 2.0 connector #2 (-at least one USB 2.0 connector should be enabled for EHCI support.) The options are Disabled and **Enabled**.

XHCI Pre-Boot Drive

Select Enabled to enable XHCI (Extensible Host Controller Interface) support on a pre-boot drive specified by the user. The options are **Enabled** and Disabled.

▶SATA Configuration

When this submenu is selected, AMI BIOS automatically detects the presence of the SATA devices that are supported by the Intel PCH chip and displays the following items:

SATA Controller

Select Enabled to enable the onboard SATA controller supported by the Intel PCH chip. The options are **Enabled** and Disabled.

Configure SATA as

Select IDE to configure a SATA drive specified by the user as an IDE drive. Select AHCI to configure a SATA drive specified by the user as an AHCI drive. Select RAID to configure a SATA drive specified by the user as a RAID drive. The options are IDE, **AHCI**, and RAID.

**If the item above "Configure SATA as" is set to AHCI, the following items will display:*

Support Aggressive Link Power Management

When this item is set to Enabled, the SATA AHCI controller manages the power usage of the SATA link. The controller will put the link to a low power state when the I/O is inactive for an extended period of time, and the power state will return to normal when the I/O becomes active. The options are **Enabled** and Disabled.

SATA Port 0~ Port 5

This item displays the information detected on the installed SATA drive on the particular SATA port.

- Model number of drive and capacity

Port 0~ Port 5

Select Enabled to enable a SATA port specified by the user. The options are Disabled and Enabled.

Port 0 ~ Port 5 Spin Up Device

On an edge detect from 0 to 1, set this item to allow the PCH to initialize the device. The options are Enabled and **Disabled**.

Port 0 ~ Port 5 SATA Device Type

Use this item to specify if the SATA port specified by the user should be connected to a Solid State drive or a Hard Disk Drive. The options are **Hard Disk Drive** and Solid State Drive.

**If the item above "Configure SATA as" is set to IDE, the following items will display:*

Serial ATA Port 0~ Port 5

This item indicates that a SATA port specified by the user is installed (present) or not.

Port 0 ~ Port 5 SATA Device Type (Available when a SATA port is detected)

Use this item to specify if the SATA port specified by the user should be connected to a Solid State drive or a Hard Disk Drive. The options are **Hard Disk Drive** and Solid State Drive.

**If the item above "Configure SATA as" is set to RAID, the following items will display:*

Support Aggressive Link Power Management

When this item is set to Enabled, the SATA AHCI controller manages the power usage of the SATA link. The controller will put the link to a low power state when the I/O is inactive for an extended period of time, and the power state will return to normal when the I/O becomes active. The options are **Enabled** and Disabled.

SATA RAID Option ROM/UEFI Driver

Select EFI to load the EFI driver for system boot. Select Legacy to load a legacy OPROM for system boot. The options are Disabled, EFI, and **Legacy.**

SATA/sSATA RAID Boot Select

Select SATA Controller to boot the system from a SATA RAID device. Select sSATA Controller to boot the system from a sSATA RAID device. Select Both to boot the system either from a SATA RAID device or from an sSATA RAID device. Please note that the option-Both is not supported by the Windows Server 2012/R2 OS. The options are Both, SATA Controller, and **sSATA Controller**.

Serial ATA Port 0~ Port 5

This item displays the information detected on the installed SATA drives on the particular SATA port.

- Model number of drive and capacity

Port 0~ Port 5

Select Enabled to enable a SATA port specified by the user. The options are Disabled and **Enabled**.

Port 0 ~ Port 5 Spin Up Device

On an edge detect from 0 to 1, set this item to allow the PCH to start a COMRESET initialization to the device. The options are Enabled and **Disabled**.

Port 0 ~ Port 5 SATA Device Type

Use this item to specify if the SATA port specified by the user should be connected to a Solid State drive or a Hard Disk Drive. The options are **Hard Disk Drive** and Solid State Drive.

▶sSATA Configuration

When this submenu is selected, AMI BIOS automatically detects the presence of the SATA devices that are supported by the PCH-sSATA controller and displays the following items:

sSATA Controller

This item enables or disables the onboard SATA controller supported by the Intel PCH-sSATA controller. The options are **Enabled** and Disabled.

Configure sSATA as

Select IDE to configure an sSATA drive specified by the user as an IDE drive. Select AHCI to configure an sSATA drive specified by the user as an AHCI drive. Select RAID to configure an sSATA drive specified by the user as a RAID drive. The options are IDE, **AHCI**, and RAID.

**If the item above "Configure sSATA as" is set to AHCI, the following items will display:*

Support Aggressive Link Power Management

When this item is set to Enabled, the SATA AHCI controller manages the power usage of the SATA link. The controller will put the link to a low power state when the I/O is inactive for an extended period of time, and the power state will return to normal when the I/O becomes active. The options are **Enabled** and Disabled.

sSATA Port 0~ Port 3

This item displays the information detected on the installed on the sSATA port. specified by the user.

- Model number of drive and capacity

sSATA Port 0~ Port 3

Select Enabled to enable an sSATA port specified by the user. The options are Disabled and Enabled.

sSATA Port 0 ~ Port 3 Spin Up Device

On an edge detect from 0 to 1, set this item to allow the PCH to start a COMRESET initialization to the device. The options are Enabled and **Disabled**.

Port 0 ~ Port 3 sSATA Device Type

Use this item to specify if the sSATA port specified by the user should be connected to a Solid State drive or a Hard Disk Drive. The options are **Hard Disk Drive** and Solid State Drive.

**If the item above "Configure sSATA as" is set to IDE, the following items will display:*

sSATA Port 0~ Port 3

This item indicates that an sSATA port specified by the user is installed (present) or not.

Port 0 ~ Port 3 sSATA Device Type (Available when a SATA port is detected)

Use this item to specify if the sSATA port specified by the user should be connected to a Solid State drive or a Hard Disk Drive. The options are **Hard Disk Drive** and Solid State Drive.

**If the item above "Configure sSATA as" is set to RAID, the following items will display:*

Support Aggressive Link Power Management

When this item is set to Enabled, the SATA AHCI controller manages the power usage of the SATA link. The controller will put the link to a low power state when the I/O is inactive for an extended period of time, and the power state will return to normal when the I/O becomes active. The options are **Enabled** and Disabled.

sSATA RAID Option ROM/UEFI Driver

Select EFI to load the EFI driver for system boot. Select Legacy to load a legacy OPROM for system boot. The options are Disabled, EFI, and **Legacy.**

SATA/sSATA RAID Boot Select

Select SATA Controller to boot the system from a SATA RAID device. Select sSATA Controller to boot the system from a sSATA RAID device. Select Both to boot the system either from a SATA RAID device or from an sSATA RAID device. Please note that the option-Both is not supported by the Windows Server 2012/R2 OS. The options are Both, SATA Controller, and **sSATA Controller**.

sSATA Port 0~ Port 3

This item displays the information detected on the installed sSATA drives on the particular sSATA port.

- Model number of drive and capacity

sSATA Port 0~ Port 3

Select Enabled to enable an sSATA port specified by the user. The options are Disabled and Enabled.

sSATA Port 0 ~ Port 3 Spin Up Device

On an edge detect from 0 to 1, set this item to allow the PCH to start a COMRESET initialization to the device. The options are Enabled and **Disabled**.

Port 0 ~ Port 3 sSATA Device Type

Use this item to specify if the sSATA port specified by the user should be connected to a Solid State drive or a Hard Disk Drive. The options are **Hard Disk Drive** and Solid State Drive.

▶Server ME (Management Engine) Configuration

This feature displays the following system ME configuration settings.

- General ME Configuration
- Operational Firmware Version
- Recovery Firmware Version
- ME Firmware Features
- ME Firmware Status #1
- ME Firmware Status #2
  - Current State
  - Error Code

▶PCIe/PCI/PnP Configuration

The following PCI information will be displayed:

- PCI Bus Driver Version
- PCI Device Common Settings

PCI Latency Timer

Use this item to configure the PCI latency timer for a device installed on a PCI bus. Select 32 to set the PCI latency timer to 32 PCI clock cycles. The options are **32**, 64, 96, 128, 160, 192, 224, and 248 (PCI Bus Clocks).

PCI-X Latency Timer

Use this item to configure the PCI-X latency timer for a device installed on a PCI bus. Select 32 to set the PCI latency timer to 32 PCI clock cycles. The options are 32, **64**, 96, 128, 160, 192, 224, and 248 (PCI Bus Clocks).

PCI PERR/SERR Support

Select Enabled to support PERR (PCI/PCI-E Parity Error)/SERR (System Error) runtime error reporting for a PCI/PCI-E slot. The options are Enabled and **Disabled**.

Above 4G Decoding (Available if the system supports 64-bit PCI decoding)

Select Enabled to decode a PCI device that supports 64-bit in the space above 4G Address. The options are Enabled and **Disabled**.

SR-IOV (Available if the system supports Single-Root Virtualization)

Select Enabled for Single-Root IO Virtualization support. The options are Enabled and **Disabled.**

Maximum Payload

Select Auto for the system BIOS to automatically set the maximum payload value for a PCI-E device to enhance system performance. The options are **Auto**, 128 Bytes, and 256 Bytes.

Maximum Read Request

Select Auto for the system BIOS to automatically set the maximum size for a read request for a PCI-E device to enhance system performance. The options are **Auto**, 128 Bytes, 256 Bytes, 512 Bytes, 1024 Bytes, 2048 Bytes, and 4096 Bytes.

ASPM Support

Use this item to set the Active State Power Management (ASPM) level for a PCI-E device. Select Auto for the system BIOS to automatically set the ASPM level based on the system configuration. Select Disabled to disable ASPM support. The options are **Disabled** and Auto.

Warning: Enabling ASPM support may cause some PCI-E devices to fail!

MMIOHBase

Use this item to select the I/O base memory size according to memory-address mapping for the PCH chip. The base memory size must be between 4032G to 4078G. The options are **56T**, 48T, 24T, 512G, and 256G.

MMIO High Size

Use this item to select the high I/O memory size according to memory-address mapping for the PCH chip. The options are **256G**, 128G, 512G, and 1024G.

CPU2 Slot1 PCI-E 3.0 x8 OPROM/CPU2 Slot2 PCI-E 3.0 x8 OPROM/CPU1 Slot3 PCI-E 3.0 x16 OPROM/CPU2 Slot4 PCI-E 2.0 x4 in x8 OPROM/CPU2 Slot5 PCI-E 3.0 x16 OPROM/CPU2 Slot6 PCI-E 3.0 x8 OPROM/Onboard SAS Option ROM

Select Enabled to enable Option ROM support to boot the computer using a device installed on the slot specified by the user. The options are Disabled, **Legacy**, and EFI.

Onboard LAN Option ROM Type

Select Enabled to enable Option ROM support to boot the computer using a device installed on the slot specified by the user. The options are **Legacy** and EFI.

Onboard LAN1 Option ROM/Onboard LAN2 Option ROM/ Onboard LAN3 Option ROM/Onboard LAN4 Option ROM/Onboard Video Option ROM

Use this option to select the type of device installed in LAN Port1, LAN Port2 or the onboard video device used for system boot. The default settings for LAN1 Option ROM is **PXE**, for LAN2/LAN3/LAN4 Option ROMs are **Disabled** ,and for Onboard Video Option ROM is **Legacy**.

VGA Priority

Use this item to select the graphics device to be used as the primary video display for system boot. The options are **Onboard** and Offboard.

Network Stack

Select Enabled to enable PXE (Preboot Execution Environment) or UEFI (Unified Extensible Firmware Interface) for network stack support. The options are Enabled and **Disabled**.

▶Super IO Configuration

Super IO Chip AST2400

▶Serial Port 1 Configuration/Serial Port 2 Configuration

Serial Port 1/Serial Port 2

Select Enabled to enable the onboard serial port specified by the user. The options are **Enabled** and Disabled.

Device Settings

This item displays the base I/O port address and the Interrupt Request address of a serial port specified by the user.

Change Port 1 Settings/Change Port 2 Settings

This feature specifies the base I/O port address and the Interrupt Request address of Serial Port 1 or Serial Port 2. Select **Auto** for the BIOS to automatically assign the base I/O and IRQ address to a serial port specified.

The options for Serial Port 1 are **Auto**, (IO=3F8h; IRQ=4), (IO=3F8h; IRQ=3, 4, 5, 6, 7, 9, 10, 11, 12), (IO=2F8h; IRQ=3, 4, 5, 6, 7, 9, 10, 11, 12); (IO=3E8h; IRQ=3, 4, 5, 6, 7, 9, 10, 11, 12), and (IO=2E8h; IRQ=3, 4, 5, 6, 7, 9, 10, 11, 12).

The options for Serial Port 2 are **Auto**, (IO=3F8h; IRQ=4), (IO=3F8h; IRQ=3, 4, 5, 6, 7, 9, 10, 11, 12), (IO=2F8h; IRQ=3, 4, 5, 6, 7, 9, 10, 11, 12); (IO=3E8h; IRQ=3, 4, 5, 6, 7, 9, 10, 11, 12), and (IO=2E8h; IRQ=3, 4, 5, 6, 7, 9, 10, 11, 12).

Serial Port 2 Attribute

Select SOL to use COM Port 2 as a Serial_Over_LAN (SOL) port for console redirection. The options are COM and **SOL**.

▶Serial Port Console Redirection

COM 1

COM 1 Console Redirection

Select Enabled to enable COM Port 1 Console Redirection, which will allow a client machine to be connected to a host machine at a remote site for networking. The options are **Disabled** and Enabled.

**If the item above set to Enabled, the following items will become available for configuration:*

▶COM1 Console Redirection Settings

Terminal Type

Use this item to select the target terminal emulation type for Console Redirection. Select VT100 to use the ASCII Character set. Select VT100+ to add color and function key support. Select ANSI to use the Extended ASCII Character Set. Select VT-UTF8 to use UTF8 encoding to map Unicode characters into one or more bytes. The options are ANSI, VT100, **VT100+**, and VT-UTF8.

Bits Per second

Use this item to set the transmission speed for a serial port used in Console Redirection. Make sure that the same speed is used in the host computer and the client computer. A lower transmission speed may be required for long and busy lines. The options are 9600, 19200, 38400, 57600 and **115200** (bits per second).

Data Bits

Use this item to set the data transmission size for Console Redirection. The options are 7 (Bits) and **8 (Bits)**.

Parity

A parity bit can be sent along with regular data bits to detect data transmission errors. Select Even if the parity bit is set to 0, and the number of 1's in data bits is even. Select Odd if the parity bit is set to 0, and the number of 1's in data bits is odd. Select None if you do not want to send a parity bit with your data bits in transmission. Select Mark to add a mark as a parity bit to be sent along with the data bits. Select Space to add a Space as a parity bit to be sent with your data bits. The options are **None**, Even, Odd, Mark and Space.

Stop Bits

A stop bit indicates the end of a serial data packet. Select 1 Stop Bit for standard serial data communication. Select 2 Stop Bits if slower devices are used. The options are **1** and 2.

Flow Control

Use this item to set the flow control for Console Redirection to prevent data loss caused by buffer overflow. Send a "Stop" signal to stop sending data when the receiving buffer is full. Send a "Start" signal to start sending data when the receiving buffer is empty. The options are **None** and Hardware RTS/CTS.

VT-UTF8 Combo Key Support

Select Enabled to enable VT-UTF8 Combination Key support for ANSI/VT100 terminals. The options are **Enabled** and Disabled**.**

Recorder Mode

Select Enabled to capture the data displayed on a terminal and send it as text messages to a remote server. The options are **Disabled** and Enabled.

Resolution 100x31

Select Enabled for extended-terminal resolution support. The options are Disabled and **Enabled**.

Legacy OS Redirection Resolution

Use this item to select the number of rows and columns used in Console Redirection for legacy OS support. The options are 80x24 and **80x25**.

Putty KeyPad

Use this feature to select Function Keys and KeyPad settings for Putty, which is a terminal emulator designed for the Windows OS. The options are **VT100**, LINUX, XTERMR6, SCO, ESCN, and VT400.

Redirection After BIOS Post

Use this feature to enable or disable legacy Console Redirection after BIOS POST (Power-On Self-Test). When the option-Bootloader is selected, legacy Console Redirection is disabled before booting the OS. When the option-Always Enable is selected, legacy Console Redirection remains enabled while the OS boots up. The options are **Always Enable** and Bootloader.

SOL/COM2

SOL/COM2 Console Redirection

Select Enabled to use the SOL port for Console Redirection. The options are **Enabled** and Disabled.

**If the item above set to Enabled, the following items will become available for user's configuration:*

▶SOL/COM2 Console Redirection Settings

Use this feature to specify how the host computer will exchange data with the client computer, which is the remote computer used by the user.

Terminal Type

Use this feature to select the target terminal emulation type for Console Redirection. Select VT100 to use the ASCII Character set. Select VT100+ to add color and function key support. Select ANSI to use the Extended ASCII Character Set. Select VT-UTF8 to use UTF8 encoding to map Unicode characters into one or more bytes. The options are ANSI, VT100, **VT100+**, and VT-UTF8.

Bits Per second

Use this feature to set the transmission speed for a serial port used in Console Redirection. Make sure that the same speed is used in the host computer and the client computer. A lower transmission speed may be required for long and busy lines. The options are 9600, 19200, 38400, 57600 and **115200** (bits per second).

Data Bits

Use this feature to set the data transmission size for Console Redirection. The options are 7 (Bits) and **8 (Bits)**.

Parity

A parity bit can be sent along with regular data bits to detect data transmission errors. Select Even if the parity bit is set to 0, and the number of 1's in data bits is even. Select Odd if the parity bit is set to 0, and the number of 1's in data bits is odd. Select None if you do not want to send a parity bit with your data bits in transmission. Select Mark to add a mark as a parity bit to be sent along with the data bits. Select Space to add a Space as a parity bit to be sent with your data bits. The options are **None**, Even, Odd, Mark and Space.

Stop Bits

A stop bit indicates the end of a serial data packet. Select 1 Stop Bit for standard serial data communication. Select 2 Stop Bits if slower devices are used. The options are **1** and 2.

Flow Control

Use this feature to set the flow control for Console Redirection to prevent data loss caused by buffer overflow. Send a "Stop" signal to stop sending data when the receiving buffer is full. Send a "Start" signal to start data-sending when the receiving buffer is empty. The options are **None** and Hardware RTS/CTS.

VT-UTF8 Combo Key Support

Select Enabled to enable VT-UTF8 Combination Key support for ANSI/VT100 terminals. The options are **Enabled** and Disabled**.**

Recorder Mode

Select Enabled to capture the data displayed on a terminal and send it as text messages to a remote server. The options are **Disabled** and Enabled.

Resolution 100x31

Select Enabled for extended-terminal resolution support. The options are Disabled and **Enabled**.

Legacy OS Redirection Resolution

Use this feature to select the number of rows and columns used in Console Redirection for legacy OS support. The options are 80x24 and **80x25**.

Putty KeyPad

This feature selects Function Keys and KeyPad settings for Putty, which is a terminal emulator designed for the Windows OS. The options are **VT100**, LINUX, XTERMR6, SCO, ESCN, and VT400.

Redirection After BIOS Post

Use this feature to enable or disable legacy Console Redirection after BIOS POST (Power-On Self-Test). When this feature is set to Bootloader, legacy Console Redirection is disabled before booting the OS. When this feature is set to Always Enable, legacy Console Redirection remains enabled upon OS boot. The options are **Always Enable** and Bootloader.

Legacy Console Redirection

The submenu allows the user to configure Legacy Console Redirection settings so that legacy devices can be used for Console Redirection.

►Legacy Console Redirection Settings

Use this feature to specify how the host computer will communicate with the client compute at a remote site via legacy devices.

Legacy Serial Redirection Port

The feature selects a legacy serial port to be used for Console Redirection. The options are **COM1** and COM2/SOL.

Serial Port for Out-of-Band Management/Windows Emergency Management Services (EMS)

The submenu allows the user to configure Console Redirection settings to support Out-of-Band Serial Port management.

EMS Console Redirection

Select Enabled to use a COM port selected by the user for EMS Console Redirection. The options are Enabled and **Disabled.**

*If the item above set to Enabled, the following items will become available for user's configuration:

▶EMS Console Redirection Settings (Available when EMS Console Redirection is enabled)

Use this feature to specify how the host computer will exchange data with the client computer, which is the remote computer used by the user.

Out-of-Band Management Port

The feature selects a serial port in a client server to be used by the Windows Emergency Management Services (EMS) to communicate with a remote host server. The options are **COM1 (Console Redirection)** and COM2/SOL (Console Redirection).

Terminal Type

Use this feature to select the target terminal emulation type for Console Redirection. Select VT100 to use the ASCII character set. Select VT100+ to add color and function key support. Select ANSI to use the extended ASCII character set. Select VT-UTF8 to use UTF8 encoding to map Unicode characters into one or more bytes. The options are ANSI, VT100, VT100+, and **VT-UTF8**.

Bits Per Second

This item sets the transmission speed for a serial port used in Console Redirection. Make sure that the same speed is used in both host computer and the client computer. A lower transmission speed may be required for long and busy lines. The options are 9600, 19200, 57600, and **115200** (bits per second).

Flow Control

Use this item to set the flow control for Console Redirection to prevent data loss caused by buffer overflow. Send a "Stop" signal to stop data-sending when the receiving buffer is full. Send a "Start" signal to start data-sending when the receiving buffer is empty. The options are **None,** Hardware RTS/CTS, and Software Xon/Xoff.

The setting for each these features is displayed:

Data Bits, Parity, Stop Bits

▶Trusted Computing (Available when a TPM device is installed and detected by the BIOS)

Configuration

Security Device Support

If this feature and the TPM jumper on the motherboard are both set to Enabled, onboard security devices will be enabled for TPM (Trusted Platform Module) support to enhance data integrity and network security. Please reboot the system for a change on this setting to take effect. The options are Enabled and **Disabled**.

TPM State

Select Enabled to use TPM (Trusted Platform Module) settings to enhance system data security. Please reboot your system for any change on the TPM state to take effect. The options are Disabled and **Enabled**.

Pending Operation

Use this item to schedule a TPM-related operation to be performed by a security device for system data integrity. Your system will reboot to carry out a pending TPM operation. The options are **0**, Enable Take Ownership, Disable Take Ownership, and TPM Clear.

Note: Your system will reboot to carry out a pending TPM operation.

Current Status Information

This item displays the status of the TPM support on this motherboard.

▶Intel TXT (LT-SX) Configuration

This submenu allows the user to configure the following TXT settings.

TXT Support

Select Enabled to enable Intel Trusted Execution Technology (TXT) support. The options are **Disabled** and Enabled.

Note 1: If the option for this item (TXT Support) is set to Enabled, be sure to disable EV DFX (Device Function On-Hide) support for the system to work properly. (EV DFX is under "IIO Configuration" in the "Chipset/North Bridge" submenu on Page 4-10).

Note 2: For more information on TPM, please refer to the TPM manual at http://www.supermicro.com/manuals/other/AOM-TPM-9655V_9655H.pdf

▶ACPI Settings

WHEA Support

Select Enabled to support the Windows Hardware Error Architecture (WHEA) platform and provide a common infrastructure for the system to handle hardware errors within the Windows OS environment to reduce system crashes and to enhance system recovery and health monitoring. The options are **Enabled** and Disabled.

High Precision Event Timer

Select Enabled to activate the High Precision Event Timer (HPET) that produces periodic interrupts at a much higher frequency than a Real-time Clock (RTC) does in synchronizing multimedia streams, providing smooth playback and reducing the dependency on other timestamp calculation devices, such as an x86 RDTSC Instruction embedded in the CPU. The High Performance Event Timer is used to replace the 8254 Programmable Interval Timer. The options are **Enabled** and Disabled.

NUMA (Available when the OS supports this feature)

Select Enabled to enable Non-Uniform Memory Access support to enhance system performance. The options are **Enabled** and Disabled.

4-4 Event Logs

Use this feature to configure Event Log settings.

▶Change SMBIOS Event Log Settings

This feature allows the user to configure SMBIOS Event settings.

Enabling/Disabling Options

SMBIOS Event Log

Select Enabled to enable SMBIOS (System Management BIOS) Event Logging during system boot. The options are **Enabled** and Disabled.

Runtime Error Logging Support

Select Enable to support Runtime Error Logging. The options are **Enable** and Disable. If this item is set to Enable, the following item will be available for configuration:

Memory Correctable Error Threshold

Use this item to enter the threshold value for correctable memory errors. The default setting is **10**.

Erasing Settings

Erase Event Log

Select Yes to erase all error events in the SMBIOS (System Management BIOS) log before an event logging is initialized at bootup. The options are **No** and Yes.

When Log is Full

Select Erase Immediately to immediately erase all errors in the SMBIOS event log when the event log is full. Select Do Nothing for the system to do nothing when the SMBIOS event log is full. The options are **Do Nothing** and Erase Immediately.

SMBIOS Event Log Standard Settings

Log System Boot Event

Select Enabled to log system boot events. The options are **Disabled** and Enabled.

MECI (Multiple Event Count Increment)

Enter the increment value for the multiple event counter. Enter a number between 1 to 255. The default setting is **1**.

METW (Multiple Event Count Time Window)

This item is used to determine how long (in minutes) the multiple event counter should wait before generating a new event log. Enter a number between 0 to 99. The default setting is **60**.

Note: Please reboot the system for the changes to take effect.

▶View SMBIOS Event Log

This item allows the user to view the event in the SMBIOS event log. Select this item and press <Enter> to view the status of an event in the log. The following categories are displayed:

Date/Time/Error Code/Severity

4-5 IPMI

Use this feature to configure Intelligent Platform Management Interface (IPMI) settings.

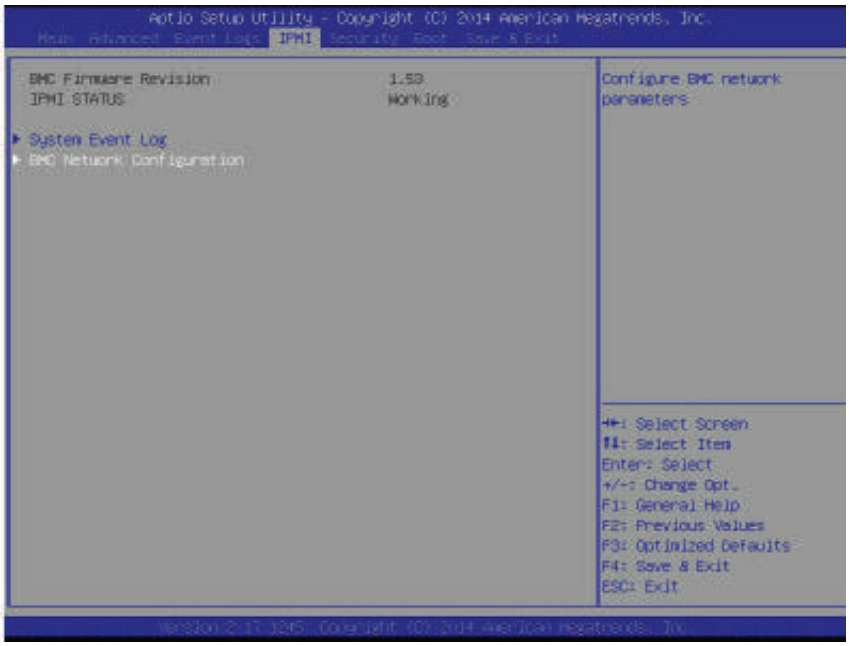

BMC (Baseboard Management Controller) Firmware Revision

This item indicates the BMC firmware revision used in your system.

IPMI Status

This item indicates the status of the IPMI firmware installed in your system.

▶System Event Log

Enabling/Disabling Options

SEL Components

Select Enabled to enable all system event logging support at bootup. The options are **Enabled** and Disabled.

Erasing Settings

Erase SEL

Select Yes, On next reset to erase all system event logs upon next system reboot. Select Yes, On every reset to erase all system event logs upon each system reboot. Select No to keep all system event logs after each system reboot. The options are **No,** Yes, On next reset, and Yes, On every reset.

When SEL is Full

This feature allows the user to determine what the AMI BIOS should do when the system event log is full. Select Erase Immediately to erase all events in the log when the system event log is full. The options are **Do Nothing** and Erase Immediately.

Note: After making changes on a setting, be sure to reboot the system for the changes to take effect.

▶BMC Network Configuration

The following items will be displayed:

- IPMI LAN Selection
- IPMI Network Link Status

Update IPMI LAN Configuration

Select Yes for the system BIOS to automatically reset the following IPMI settings at next system boot. The options are Yes and **No**.

Configuration Address Source (Available when the item above - Update IPMI LAN Configuration is set to Yes)

Use this item to select the IP address source for this computer. If Static is selected, you will need to know the IP address of this computer and enter it to the system manually in the field. If DHCP is selected, AMI BIOS will search for a DHCP (Dynamic Host Configuration Protocol) server attached to the network and request the next available IP address for this computer. The options are **DHCP** and Static.

Station IP Address

This item displays the Station IP address for this computer. This should be in decimal and in dotted quad form (i.e., 192.168.10.253).

Subnet Mask

This item displays the sub-network that this computer belongs to. The value of each three-digit number is separated by dots and it should not exceed 255.

Station MAC Address

This item displays the Station MAC address for this computer. Mac addresses are 6 two-digit hexadecimal numbers.

Gateway IP Address

This item displays the Gateway IP address for this computer. This should be in decimal and in dotted quad form (i.e., 192.168.10.253).

4-6 Security Settings

This menu allows the user to configure the following security settings for the system.

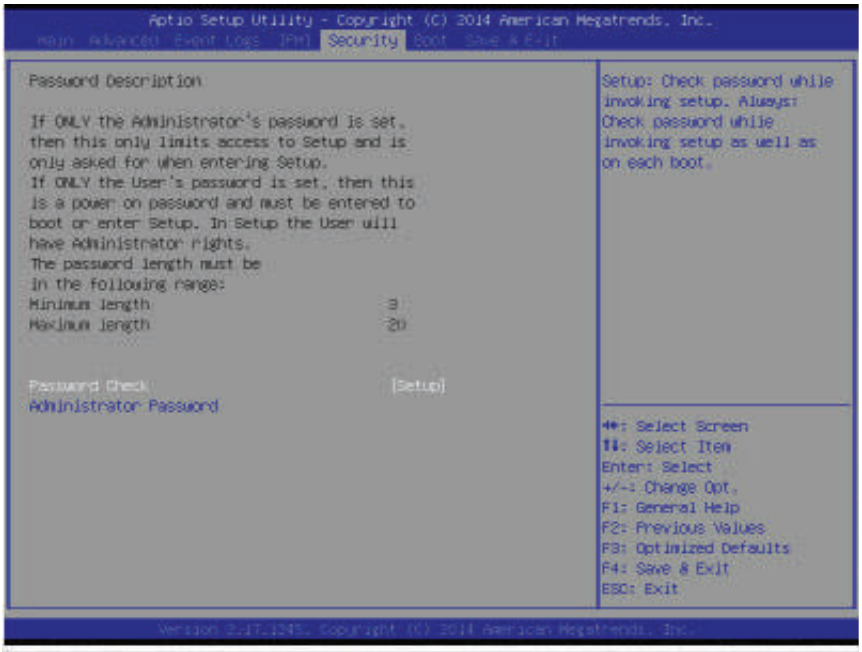

Password Check

Select Setup for the system to prompt for a password upon entering the BIOS setup utility. Select Always for the system to prompt for a password at bootup and upon entering the BIOS Setup utility. The options are **Setup** and Always.

Administrator Password

Use this feature to set the administrator password which is required before entering the BIOS setup utility. The length of the password should be from 3 characters to 20 characters long.

User Password (Available after an Administrator Password is entered)

Use this feature to set the user password which is required to enter the BIOS setup utility. The length of the password should be from 3 characters to 20 characters long.

4-7 Boot Settings

Use this feature to configure Boot Settings:

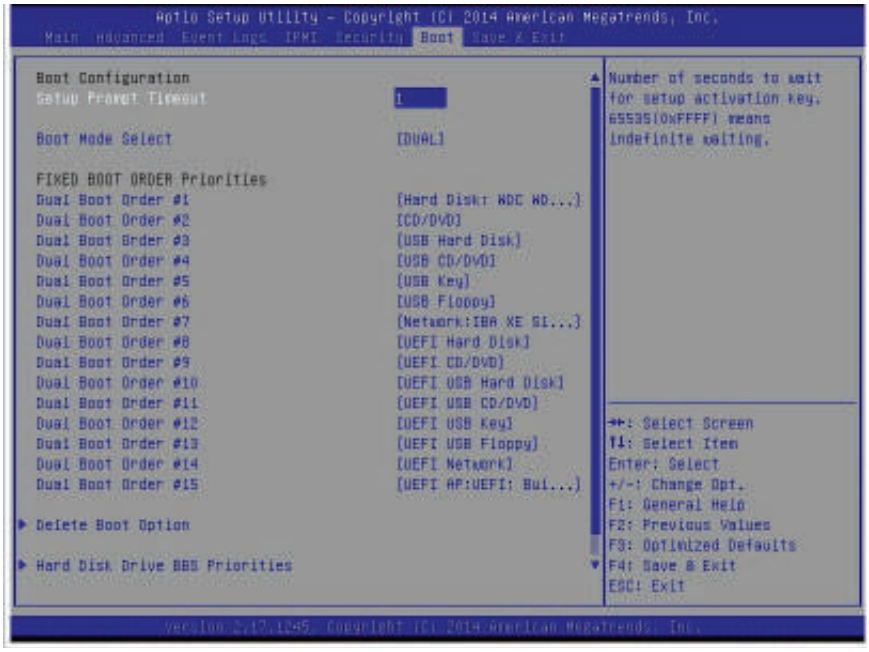

Boot Configuration

Setup Prompt Timeout

Use this item to indicate how many seconds the system shall wait for the BIOS setup activation key to respond before the system starts to boot. The default setting is **1**.

Boot Mode Select

Use this item to select the type of device to be used for system boot. The options are Legacy, UEFI, and **Dual.**

Fixed Boot Order Priorities

This option prioritizes the order of bootable devices from which the system will boot. Press <Enter> on each entry from top to bottom to select devices.

When the item above -"Boot Mode Select" is set to **Dual** (default), the following items will be displayed for configuration:

- Dual Boot Order #1 - Dual Boot Order #15

When the item above -"Boot Mode Select" is set to Legacy, the following items will be display for configuration:

- Legacy Boot Order #1 - Legacy Boot Order #7

When the item above -"Boot Mode Select" is set to UEFI, the following items will be display for configuration:

- UEFI Boot Order #1 - UEFI Boot Order #8

▶Delete Boot Option

Use this item to select a boot device to delete from the boot priority list.

Delete Boot Option

Select the target boot device to delete.

▶Hard Disk Drive BBS Priorities

- Legacy Boot Order #1

▶Network Drive BBS Priorities

- Legacy Boot Order #1

▶UEFI Application Boot Priorities

- UEFI Boot Order #1

4-8 Save & Exit

Select the Save & Exit tab from the BIOS setup screen to configure the settings below.

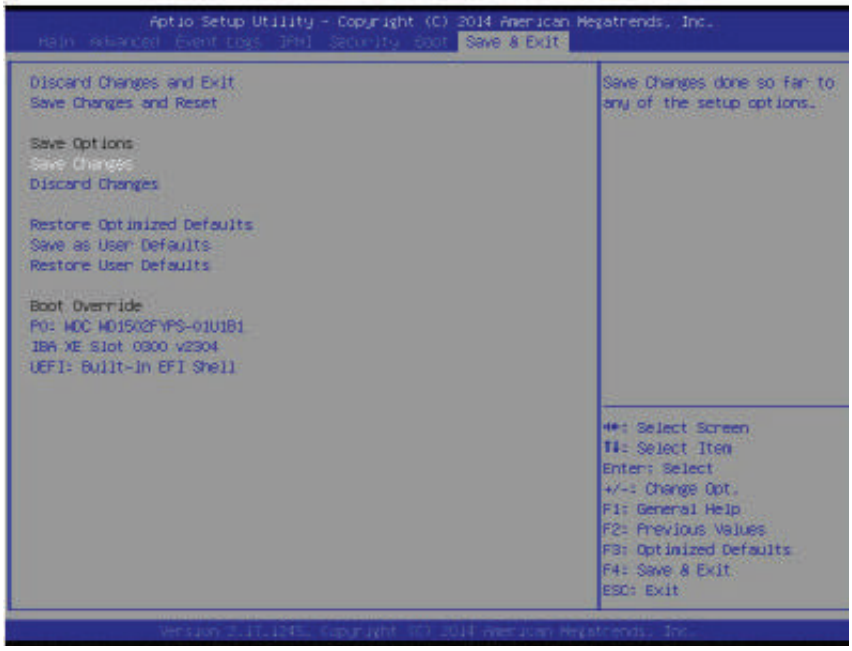

Discard Changes and Exit

Select this option to exit from the BIOS setup without making any permanent changes to the system configuration, and reboot the computer. Select Discard Changes and Exit from the Exit menu and press <Enter>.

Save Changes and Reset

When you have completed the system configuration changes, select this option to leave the BIOS setup utility and reboot the computer for the new system configuration parameters to take effect. Select Save Changes and Exit from the Exit menu and press <Enter>.

Save Options

Save Changes

When you have completed the system configuration changes, select this option to save all changes made. This will not reset (reboot) the system.

Discard Changes

Select this option and press <Enter> to discard all the changes and return to the AMI BIOS setup utility.

Restore Defaults

Select this item and press <Enter> to load the manufacture default settings which are designed for maximum system performance but not for maximum stability.

Save As User Defaults

Select this item and press <Enter> to save the current BIOS settings as user's default settings for future use.

Restore User Defaults

Select this item and press <Enter> to retrieve user-defined settings that were previously saved for future use.

Boot Override

This feature allows the user to override the Boot priorities sequence in the Boot menu and immediately boot the system with another device specified by the user. This is a one-time override.

Appendix A

BIOS Error Beep Codes

During the POST (Power-On Self-Test) routines, which are performed at each system boot, errors may occur.

Non-fatal errors are those which, in most cases, allow the system to continue to boot. The error messages normally appear on the screen.

Fatal errors will not allow the system to continue with bootup procedure. If a fatal error occurs, you should consult with your system manufacturer for possible repairs.

These fatal errors are usually communicated through a series of audible beeps. The numbers on the fatal error list correspond to the number of beeps for the corresponding error.

BIOS Error Beep Codes

Motherboard BIOS Error Beep Codes		
Beep Code/LED	**Error Message**	**Description**
1 beep	Refresh	Ready to boot
5 short beeps + 1 long beep	Memory error	No memory detected in the system
5 beeps	No Con-In or No Con-Out devices	Con-In includes USB or PS/2 keyboard, PCI or Serial Console Redirection, IPMI KVM or SOL. Con-Out includes Video Controller, PCI or Serial Console Redirection, IPMI SOL.
1 beep per device	Refresh	1 beep or each USB device detected
X9 IPMI Error Codes		
1 Continuous Beep	System OH	System Overheat

Appendix B

Software Installation Instructions

B-1 Installing Software Programs

The Supermicro website that contains drivers and utilities for your system is located at http://www.supermicro.com/wftp. Some of these must be installed, such as the chipset driver.

After accessing the product drivers and utilities page, go into the CDR_Images directory and locate the ISO file for your motherboard. Download this file to create a DVD of the drivers and utilities it contains. (You may also use a utility to extract the ISO file if preferred.)

After creating a DVD with the ISO files, insert the disk into the DVD drive on your system and the display shown in Figure B-1 should appear.

Another option is to go to the Supermicro website at http://www.supermicro.com/products/. Find the product page for your motherboard here, where you may download individual drivers and utilities to your hard drive or a USB flash drive and install from there.

Note: Please refer to the documents posted on our website at http://www.supermicro.com/support/manuals/ for additional instructions that may be applicable to your system.

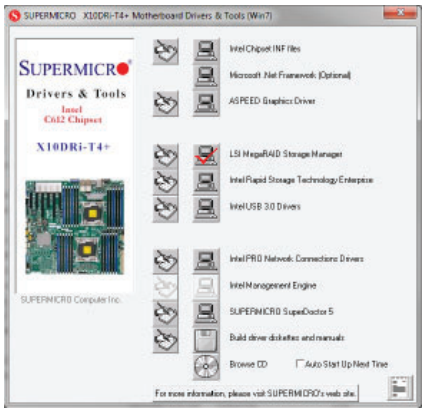

Driver/Tool Installation Display Screen

Note 1: Click the icons showing a hand writing on paper to view the readme files for each item. Click the computer icons to the right of these items to install each item (from top to the bottom) one at a time. **After installing each item, you must re-boot the system before moving on to the next item on the list.** The bottom icon with a CD on it allows you to view the entire contents.

Note 2: When making a storage driver diskette by booting into a Driver CD, please set the SATA Configuration to "Compatible Mode" and configure SATA as IDE in the BIOS Setup. After making the driver diskette, be sure to change the SATA settings back to your original settings.

B-2 Installing SuperDoctor5

The Supermicro SuperDoctor® 5 is a hardware monitoring program that functions in a command-line or web-based interface in Windows and Linux operating systems. The program monitors system health information such as CPU temperature, system voltages, system power consumption, fan speed, and provides alerts via email or Simple Network Management Protocol (SNMP).

SuperDoctor 5 comes in local and remote management versions and can be used with Nagios to maximize your system monitoring needs. With SuperDoctor 5 Management Server (SSM Server), you can remotely control power on/off and reset chassis intrusion for multiple systems with SuperDoctor 5 or IPMI. SD5 Management Server monitors HTTP and SMTP services to optimize the efficiency of your operation.

Note: The default User Name and Password for SuperDoctor 5 is admin /admin.

SuperDoctor 5 Interface Display Screen (Health Information)

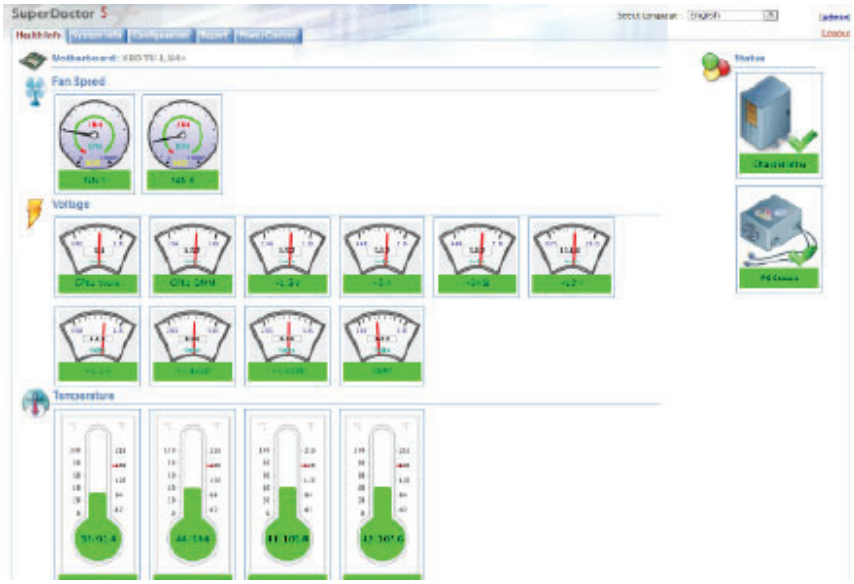

Note: The SuperDoctor 5 program and user's manual can be downloaded from the Supermicro web site at http://www.supermicro.com/products/nfo/sms_sd5.cfm.

Appendix C

UEFI BIOS Recovery Instructions

Warning: Do not upgrade the BIOS unless your system has a BIOS-related issue. Flashing the wrong BIOS can cause irreparable damage to the system. In no event shall Supermicro be liable for direct, indirect, special, incidental, or consequential damages arising from a BIOS update. If you need to update the BIOS, do not shut down or reset the system while the BIOS is updating to avoid possible boot failure.

C-1 An Overview to the UEFI BIOS

The Unified Extensible Firmware Interface (UEFI) specification provides a software-based interface between the operating system and the platform firmware in the pre-boot environment. The UEFI specification supports an architecture-independent mechanism for add-on card initialization to allow the UEFI OS loader, which is stored in the add-on card, to boot up the system. UEFI offers a clean, hands-off control to a computer system at bootup.

C-2 How to Recover the UEFI BIOS Image

A UEF BIOS flash chip consists of a recovery BIOS block, comprised of a main BIOS block (a main BIOS image). The boot block contains critical BIOS codes, including memory detection and recovery codes for the user to flash a new BIOS image if the original main BIOS image is corrupted. When the system power is on, the boot block codes execute first. Once that is completed, the main BIOS code will continue with system initialization and bootup.

Note: Follow the BIOS Recovery instructions below for BIOS recovery when the main BIOS boot crashes.

C-3 To Recover the Main BIOS Block Using a USB-Attached Device

This feature allows the user to recover a BIOS image using a USB-attached device without additional utilities used. A USB flash device such as a USB Flash Drive, or a USB CD/DVD ROM/RW device can be used for this purpose. However, a USB Hard Disk drive cannot be used for BIOS recovery at this time.

The file system supported by UEFI is FAT (including FAT12, FAT16, and FAT32) installed on a bootable or non-bootable USB-attached device. However, the BIOS

might need several minutes to locate the SUPER.ROM file if the media size becomes too large because it contains too many folders and files.

To perform UEFI BIOS recovery using a USB-attached device, follow the instructions below.

1. Using a different machine, copy the "Super.ROM" binary image file into the disc Root "\" Directory of a USB device or a writeable CD/DVD.

   Note: If you cannot locate the "Super.ROM" file in your driver disk, visit our website at www.supermicro.com to download the BIOS image into a USB flash device and rename it "Super ROM" for BIOS recovery use.

2. Insert the USB device that contains the new BIOS image ("Super.ROM") into your USB drive and power on the system

3. While powering on the system, keep pressing <Ctrl> and <Home> simultaneously on your keyboard until your hear two short beeps. This may take from a few seconds to one minute.

4. After locating the new BIOS binary image, the system will enter the BIOS Recovery menu as shown below.

   Note: At this point, you may decide if you want to start with BIOS Recovery. If you decide to proceed with BIOS Recovery, follow the procedures below.

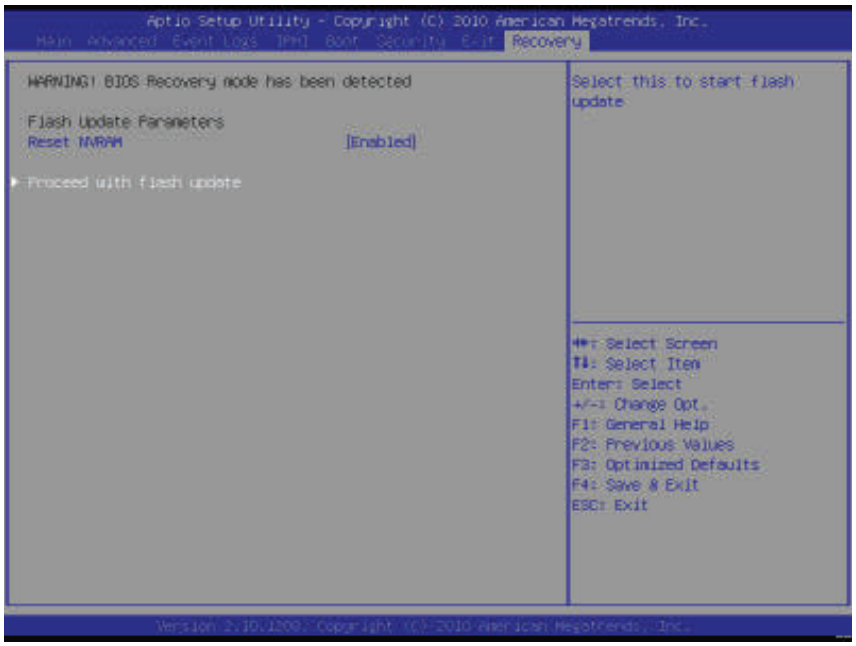

5. When the screen as shown above displays, using the arrow key, select the item- "Proceed with flash update" and press the <Enter> key. You will see the progress of BIOS Recovery as shown in the screen below.

Note: *Do not interrupt* the process of BIOS flashing until it is completed.

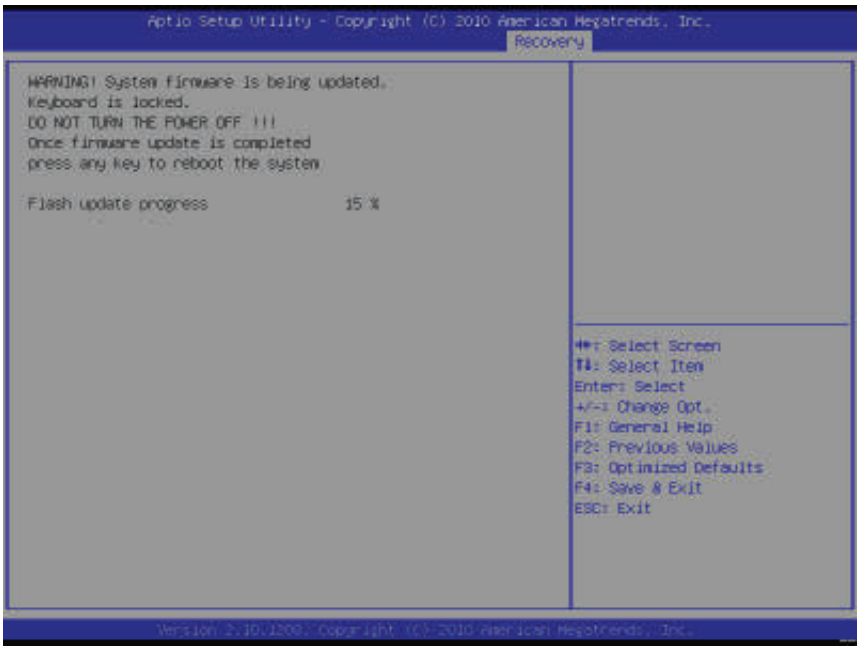

6. After the process of BIOS Recovery is complete, press any key to reboot the system.

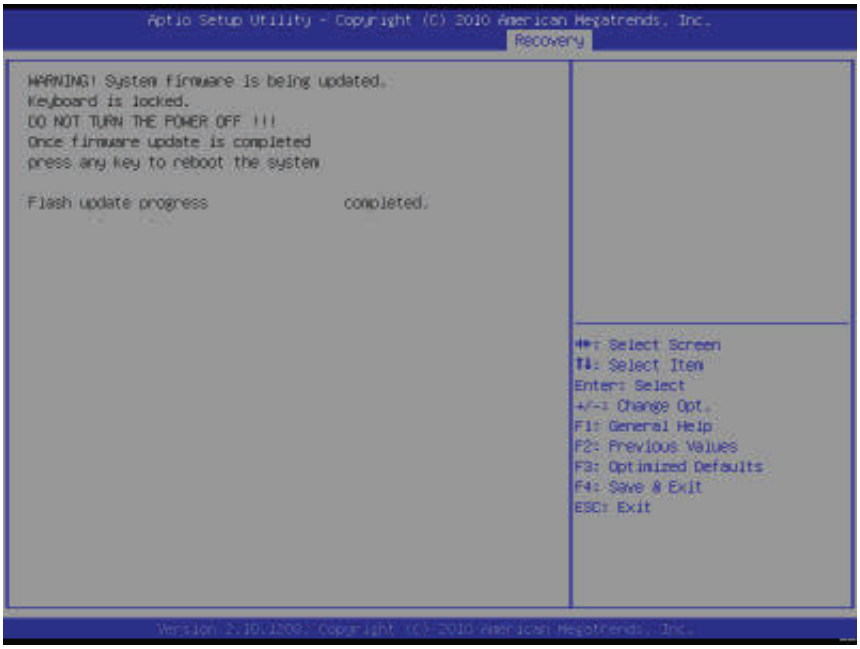

7. Using a different system, extract the BIOS package into a bootable USB flash drive.

8. When a DOS prompt appears, enter AMI.BAT BIOSname.### at the prompt.

   Note: *Do not interrupt this process* until BIOS flashing is completed.

9. After seeing the message that BIOS update is completed, unplug the AC power cable from the power supply to clear CMOS, and then plug the AC power cable in the power supply again to power on the system.

10. Press <Del> continuously to enter the BIOS Setup utility.

11. Press <F3> to load default settings.

12. After loading default settings, press <F4> to save the settings and exit the BIOS Setup utility.